CLIENT: N U Construction	PROJECT: Chancery House, Liverpool	DO NOT SCALE DIMENSION. IF IN DOUBT ASK. ALL DIMENSION ARE IN MILLIMETRES UNLESS OTHERWISE SPECIFIED. THE DRAWING IS COPYRIGHT

View from outside

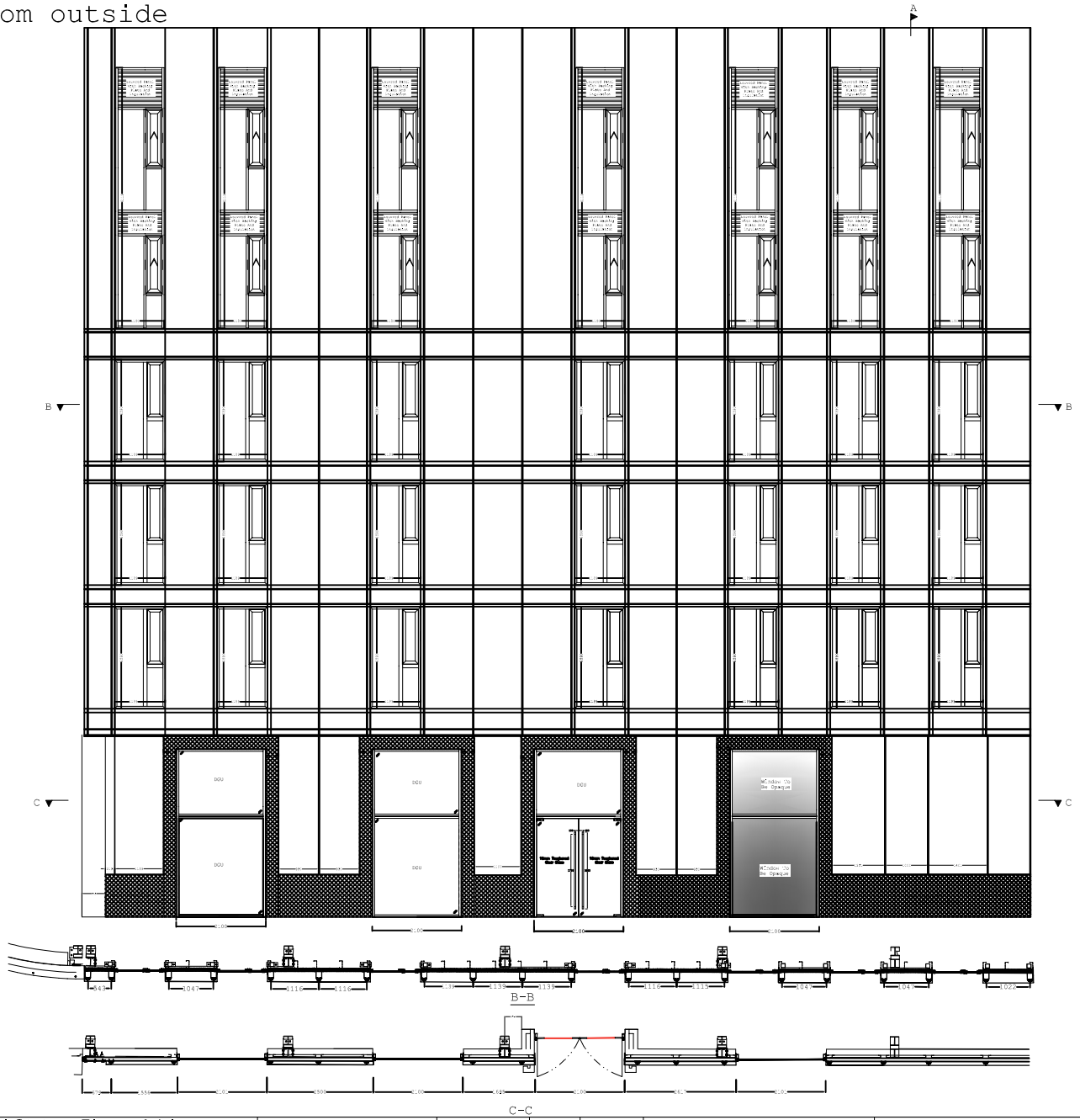

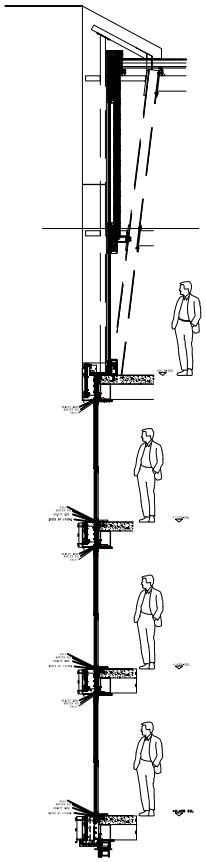

PLEASE NOTE:
VIEWED FROM THE OUTSIDE UNLESS STATED OTHERWISE

Product Description:

Elevation 1
1130x6112mm Curtain
Wall Pod With Louvre
Panel And Insulation
1189x2390mm Vent Window
1No. Entrance Doors
1No. DGU Screen With
Opaque Glass
2No. DGU Screens

Material:

Steel | **Aluminium** | Stainless

RAL: 7011

RAL Finish:

Matt | **Satin** | Gloss | Mill

Glass (Single):
10mm Tgh Clear Glass In Door

Glass (DGU):
8.8mm Clear Laminate
12mm Spacer
8mm Toughened Low E

Ironmongery:

DRAWING FOR APPROVAL

Architectural Status - Please Advise

A☐ B☐ C☐ D☐

A - Proceed to Production - No comments
B - Incorporate Comments & Proceed to Production
C - Incorporate Comments & Resubmit for Approval
D - Resubmit for approval

Date: .....
Sign: .....
Print: .....

DATE	REV	DRAWN	DESCRIPTION
04-05-16	C	MJS	Door Switched to open out
15-06-16	E	MJS	Ceramic Lookalike Changed To Louvre
02-06-16	D	MJS	Window Width Altered To Match Speedwell Revised drawings

DRAWING TITLE: Elevation 1

SCALE: NTS	DRAWN: MJS	JOB NO: 26447	DRAWING NO: 001
DATE: 21-03-16	CHECK:	QUOTE NO: 131062	REVISION: E

REDSHIELD ENGINEERING LTD
Unit 1 Q F Industrial Estate
Lower Lane; West Yorkshire
BD4 8QR Bradford
Tel:01274 736254
FAX:01274 736258

CLIENT: N U Construction	PROJECT: Chancery House, Liverpool	DO NOT SCALE DIMENSION. IF IN DOUBT ASK. ALL DIMENSION ARE IN MILLIMETRES UNLESS OTHERWISE SPECIFIED. THE DRAWING IS COPYRIGHT

View from outside

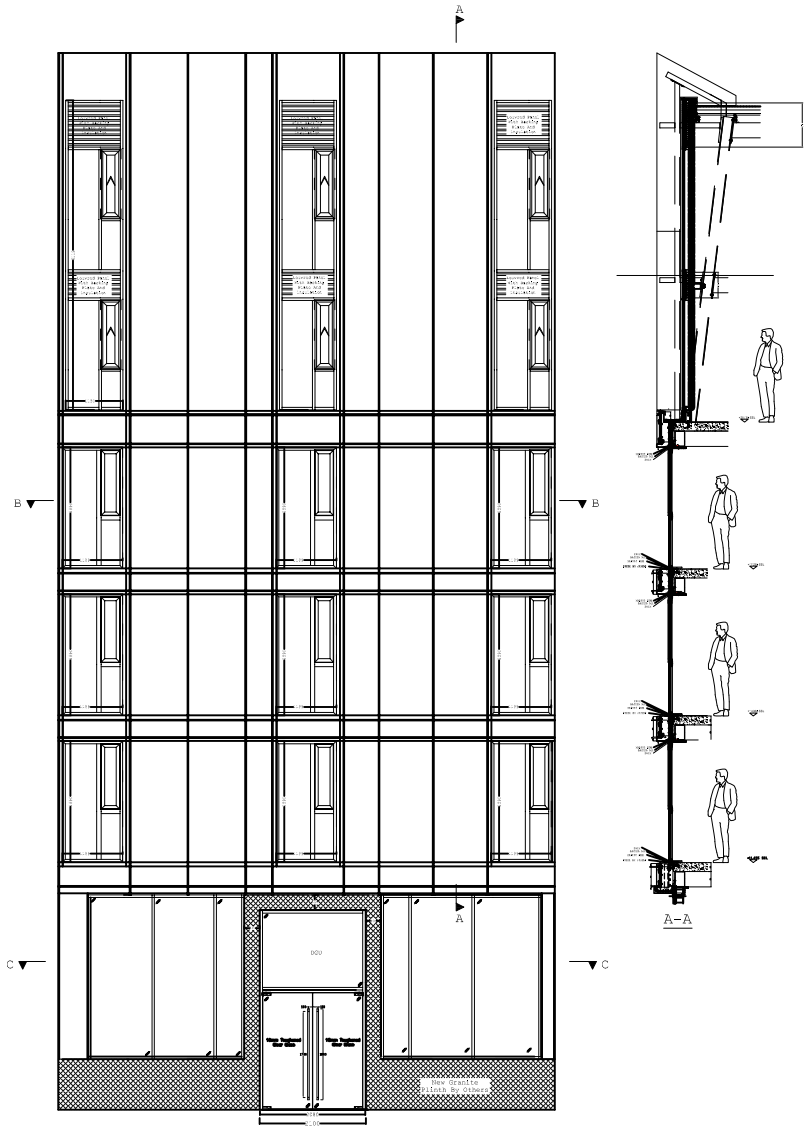

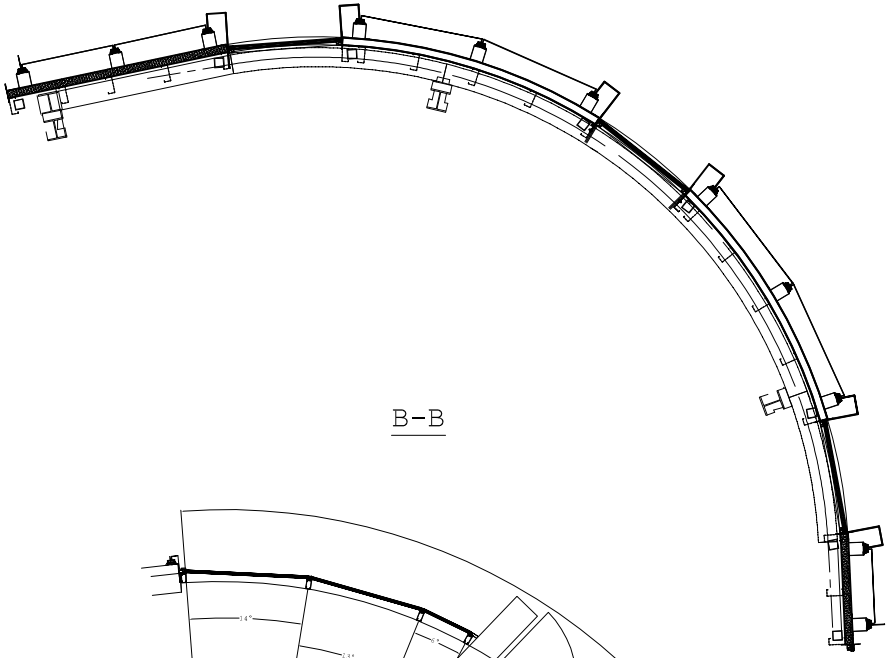

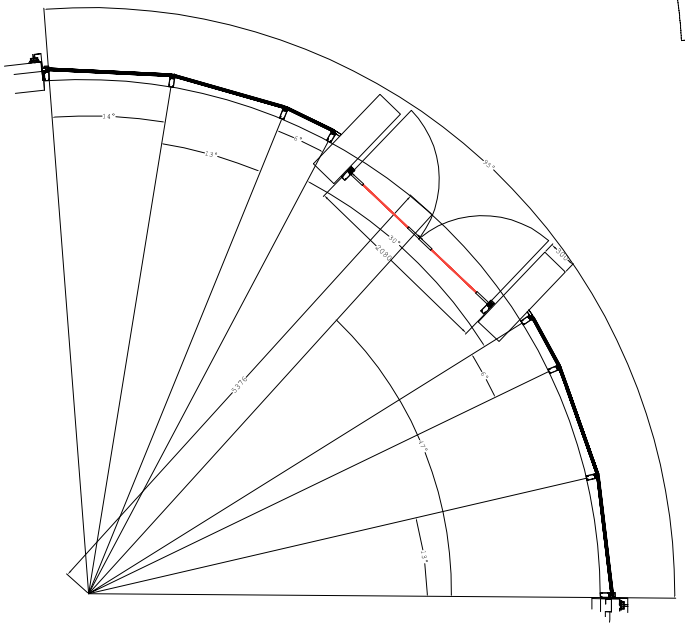

PLEASE NOTE:
VIEWED FROM THE OUTSIDE UNLESS STATED OTHERWISE

Product Description:

Elevation 2

1130x6112mm Curtain Wall Pod With Louvred Panel

1189x2390mm Vent Window

Facetted Curtain Wall With Double Auto Door

Material:

Steel | **Aluminium** | Stainless

RAL: 7011

RAL Finish:

Matt | **Satin** | Gloss | Mill

Glass (Single):

mm

Glass (DGU):

8.8mm Clear Laminate

12mm Spacer

8mm Toughened Low E

Ironmongery:

DRAWING FOR APPROVAL

Architectural Status - Please Advise

A☐ B☐ C☐ D☐

A - Proceed to Production - No comments
B - Incorporate Comments & Proceed to Production
C - Incorporate Comments & Resubmit for Approval
D - Resubmit for approval

Date: .....
Sign: .....
Print: .....

DATE	REV	DRAWN	DESCRIPTION
02-06-16	C	MJS	Window Width Altered to suit Speedwells revised drawings
15-06-16	E	MJS	Ceramic Lookalike Changed To Louvre
07-06-16	D	MJS	Facetted Screen Changed

DRAWING TITLE: Elevation 2

SCALE: NTS	DRAWN: MJS	JOB NO: 26447	DRAWING NO: 002
DATE: 21-03-16	CHECK:	QUOTE NO: 131062	REVISION: E

REDSHIELD ENGINEERING LTD
Unit 1 Q F Industrial Estate
Lower Lane; West Yorkshire
BD4 8QR Bradford
Tel:01274 736254
FAX:01274 736258

CLIENT: N U Construction	PROJECT: Chancery House, Liverpool	DO NOT SCALE DIMENSION. IF IN DOUBT ASK. ALL DIMENSION ARE IN MILLIMETRES UNLESS OTHERWISE SPECIFIED. THE DRAWING IS COPYRIGHT

View from outside

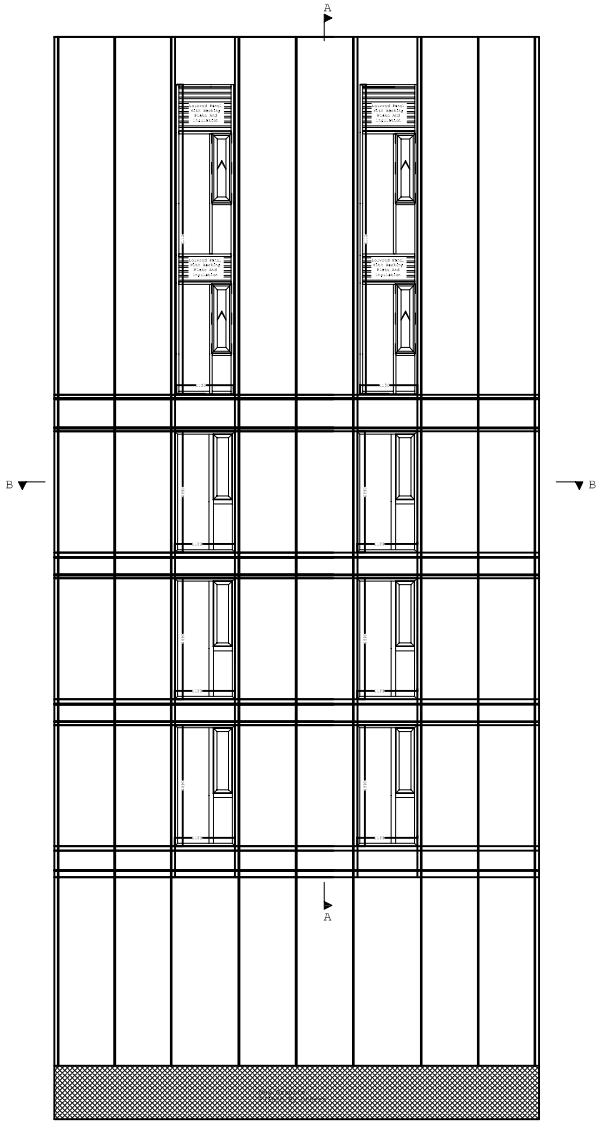

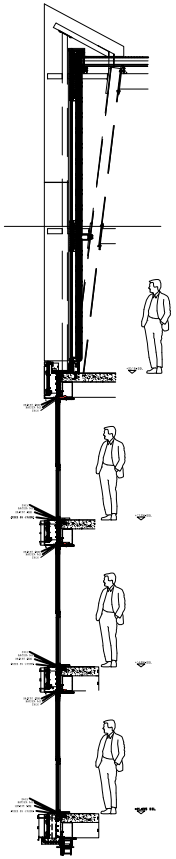

A-A

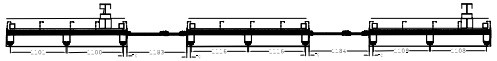

B-B

PLEASE NOTE:
VIEWED FROM THE OUTSIDE UNLESS STATED OTHERWISE

Product Description:

Elevation 3

1130x6112mm
Curtain Wall Pod

1189x2390mm Vent
Window

Material:

Steel | **Aluminium** | Stainless

RAL: 7011

RAL Finish:

Matt | **Satin** | Gloss | Mill

Glass (Single):

mm

Glass (DGU):

8.8mm Clear Laminate

12mm Spacer

8mm Toughened Low E

Ironmongery:

DRAWING FOR APPROVAL

Architectural Status - Please Advise

A☐ B☐ C☐ D☐

A - Proceed to Production - No comments
B - Incorporate Comments & Proceed to Production
C - Incorporate Comments & Resubmit for Approval
D - Resubmit for approval

Date: .....

Sign: .....

Print: .....

DATE	REV	DRAWN	DESCRIPTION
15-06-16	B	MJS	Ceramic Lookalike Changed To Louvre
02-06-16	A	MJS	Window Width Altered to suit Speedwells revised drawings

DRAWING TITLE: Elevation 3

SCALE: NTS	DRAWN: MJS	JOB NO: 26447	DRAWING NO: 003
DATE: 21-03-16	CHECK:	QUOTE NO: 131062	REVISION: B

REDSHIELD ENGINEERING LTD
Unit 1 Q F Industrial Estate
Lower Lane; West Yorkshire
BD4 8QR Bradford
Tel:01274 736254
FAX:01274 736258

CLIENT: N U Construction	PROJECT: Chancery House, Liverpool	DO NOT SCALE DIMENSION. IF IN DOUBT ASK. ALL DIMENSION ARE IN MILLIMETRES UNLESS OTHERWISE SPECIFIED. THE DRAWING IS COPYRIGHT

View from outside

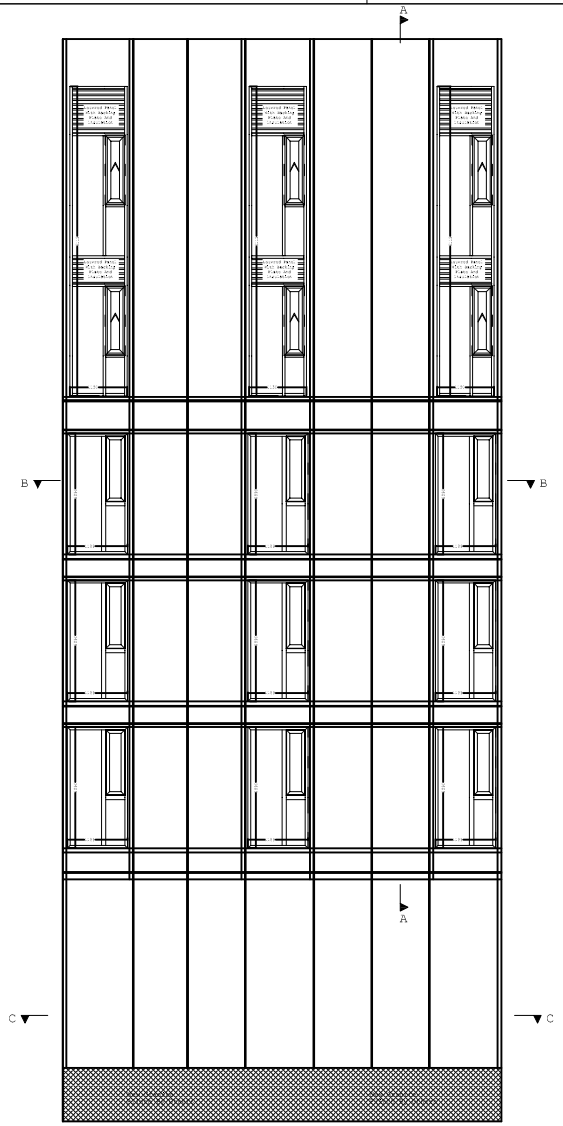

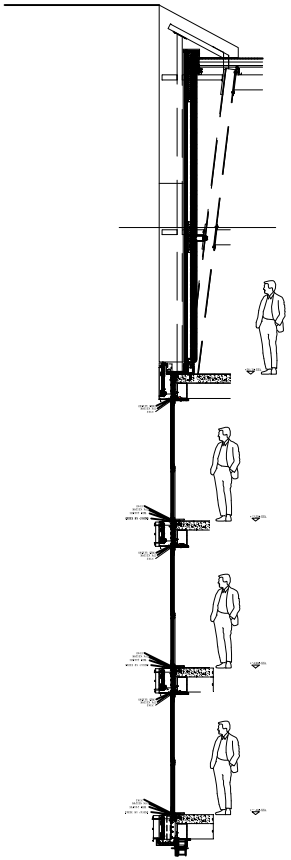

A-A

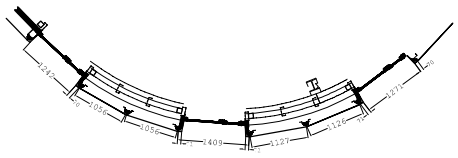

B-B

PLEASE NOTE:
VIEWED FROM THE OUTSIDE UNLESS STATED OTHERWISE

Product Description:

Elevation 4

1130x6112mm
Curtain Wall Pod

1189x2390mm Vent
Window

Material:

Steel | **Aluminium** | Stainless

RAL: 7011

RAL Finish:

Matt | **Satin** | Gloss | Mill

Glass (Single):

mm

Glass (DGU):

8.8mm Clear Laminate

12mm Spacer

8mm Toughened Low E

Ironmongery:

DRAWING FOR APPROVAL

Architectural Status - Please Advise

A☐ B☐ C☐ D☐

A - Proceed to Production - No comments
B - Incorporate Comments & Proceed to Production
C - Incorporate Comments & Resubmit for Approval
D - Resubmit for approval

Date: .....

Sign: .....

Print: .....

DATE	REV	DRAWN	DESCRIPTION
15-06-16	B	MJS	Changed Opaque to Louvre Panel
02-06-16	A	MJS	Window Width Altered To Suit Speedwells Revised Drawings

DRAWING TITLE: Elevation 4

SCALE: NTS	DRAWN: MJS	JOB NO: 26447	DRAWING NO: 004
DATE: 21-03-16	CHECK:	QUOTE NO: 131062	REVISION: B

REDSHIELD ENGINEERING LTD
Unit 1 Q F Industrial Estate
Lower Lane; West Yorkshire
BD4 8QR Bradford
Tel:01274 736254
FAX:01274 736258

CLIENT:	PROJECT:	
N U Construction	Chancery House, Liverpool	DO NOT SCALE DIMENSION. IF IN DOUBT ASK. ALL DIMENSION ARE IN MILLIMETRES UNLESS OTHERWISE SPECIFIED. THE DRAWING IS COPYRIGHT

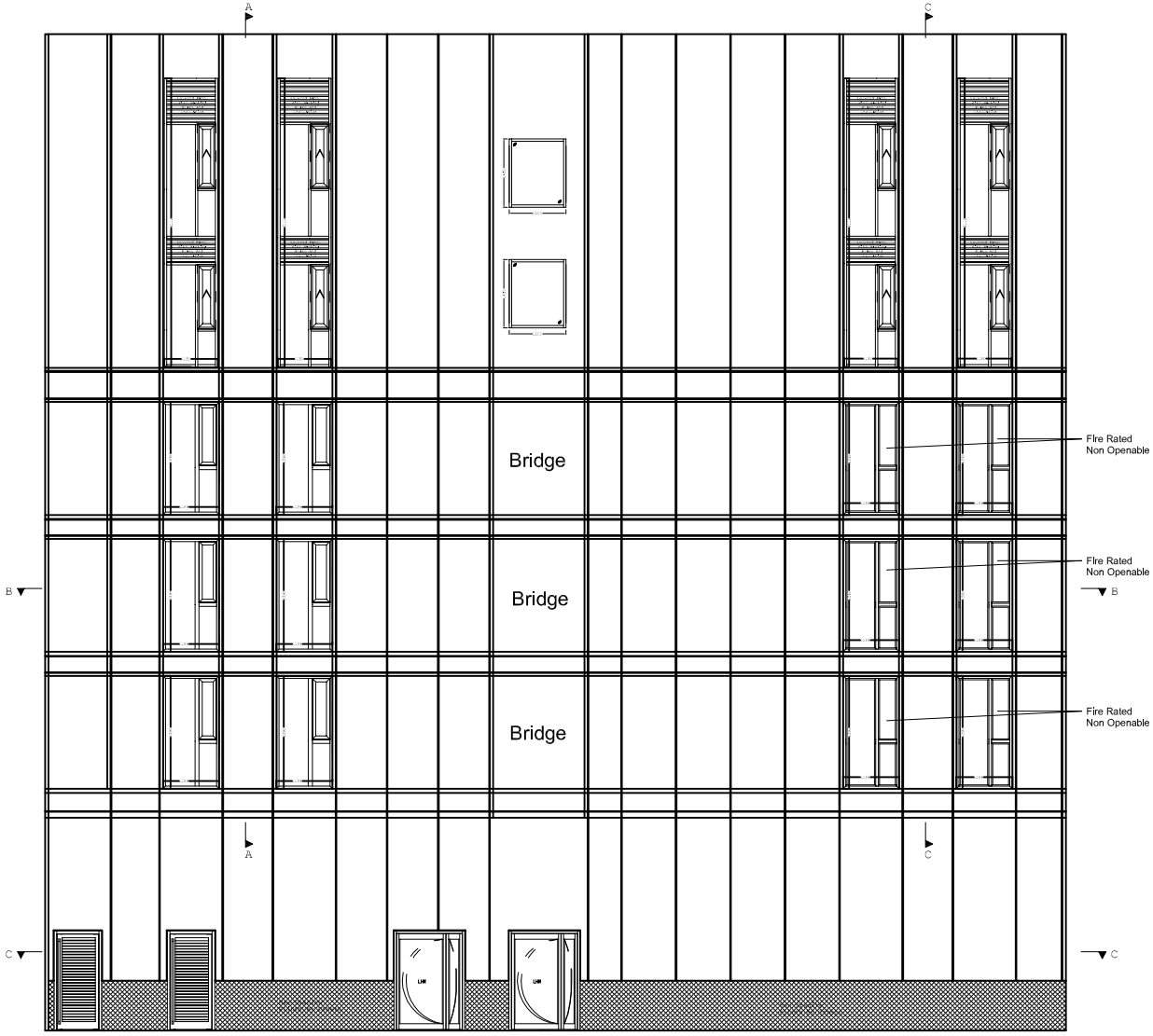

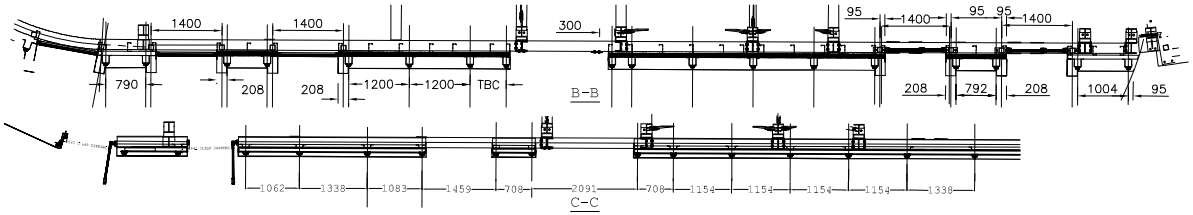

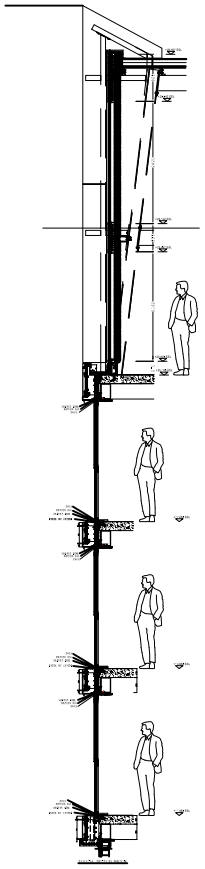

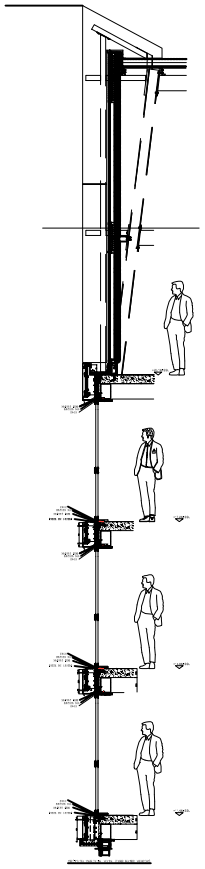

PLEASE NOTE:
VIEWED FROM THE OUTSIDE UNLESS STATED OTHERWISE

Product Description:

Elevation 5

1130x6112mm Curtain Wall Pod With Louvre

1189x2390mm Vent Window

1189x2390mm Fire Rated Window

2x 1200x1450 Roof Lights

2x Single Louvred Doors

2x Door & Half Louvred Doors

Material:

Steel | **Aluminium** | Stainless

RAL: 7011

RAL Finish:

Matt | **Satin** | Gloss | Mill

Glass (Single):

mm

Glass (DGU):

8.8mm Clear Laminate

12mm Spacer

8mm Toughened Low E

Ironmongery:

DRAWING FOR APPROVAL

Architectural Status - Please Advise

A☐ B☐ C☐ D☐

A - Proceed to Production - No comments
B - Incorporate Comments & Proceed to Production
C - Incorporate Comments & Resubmit for Approval
D - Resubmit for approval

Date: .....

Sign: .....

Print: .....

DATE	REV	DRAWN	DESCRIPTION
02-06-16	C	MJS	Window Widths Altered To Match Speedwells Revised Drawings
04-05-16	B	MJS	Doors Added
15-06-16	D	MJS	Changed Opaque Lookalike to Louvred Panel

DRAWING TITLE: Elevation 5

SCALE:	DRAWN:	JOB NO:	DRAWING NO:
NTS	MJS	26447	005
DATE: 21-03-16	CHECK:	QUOTE NO: 131062	REVISION: D

REDSHIELD ENGINEERING LTD
Unit 1 Q F Industrial Estate
Lower Lane; West Yorkshire
BD4 8QR Bradford
Tel:01274 736254
FAX:01274 736258

CLIENT: N U Construction	PROJECT: Chancery House, Liverpool	DO NOT SCALE DIMENSION. IF IN DOUBT ASK. ALL DIMENSION ARE IN MILLIMETRES UNLESS OTHERWISE SPECIFIED. THE DRAWING IS COPYRIGHT

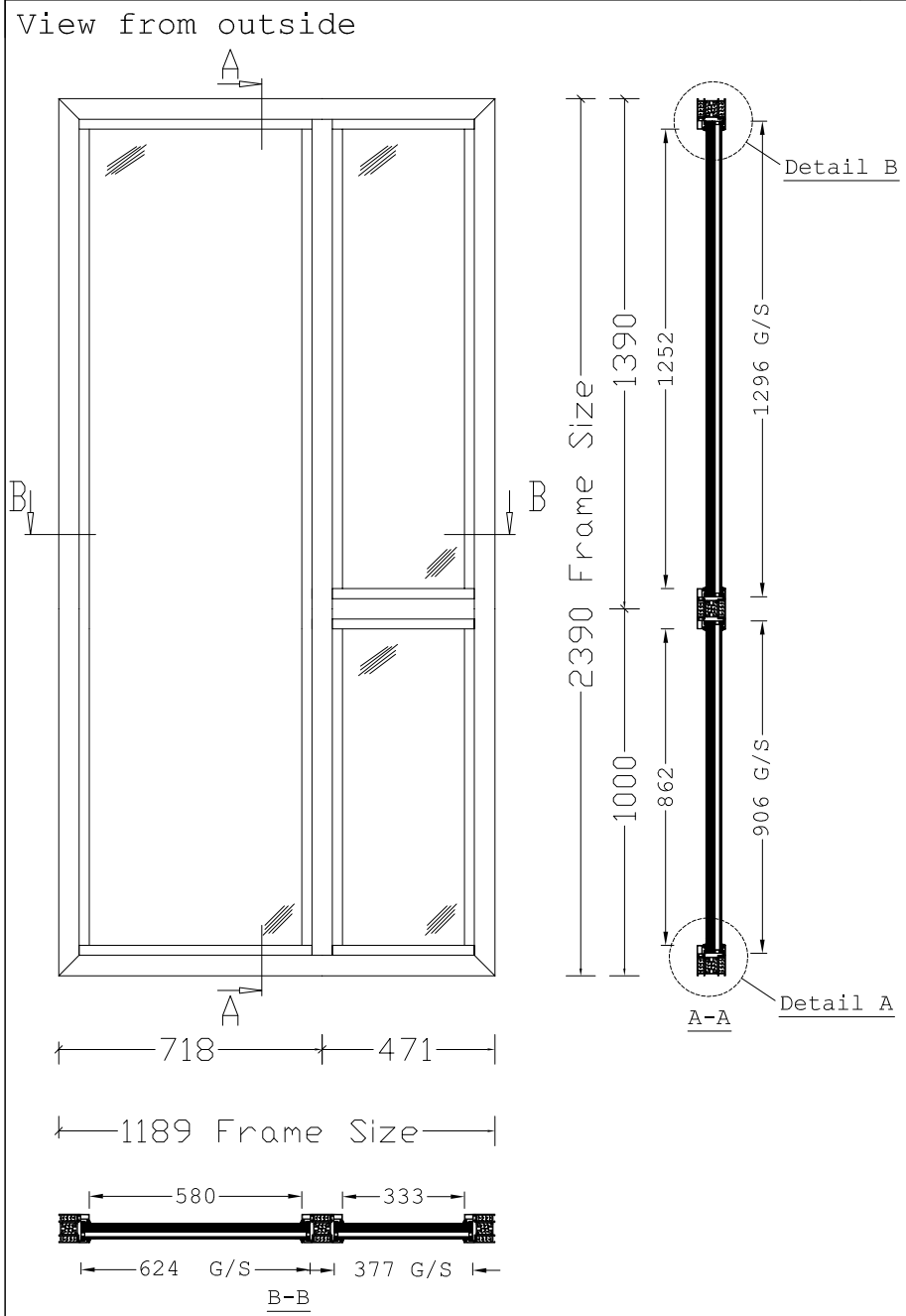

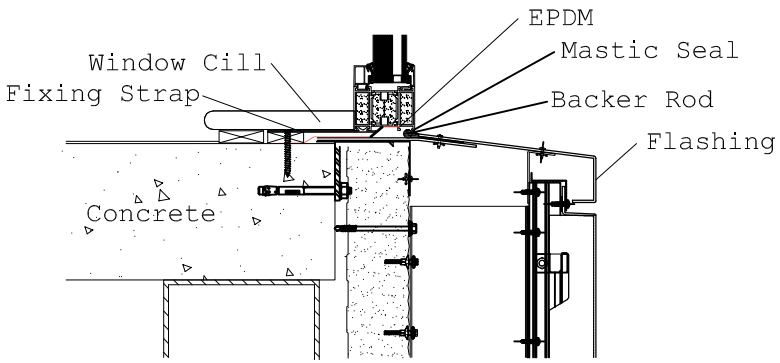

Detail A

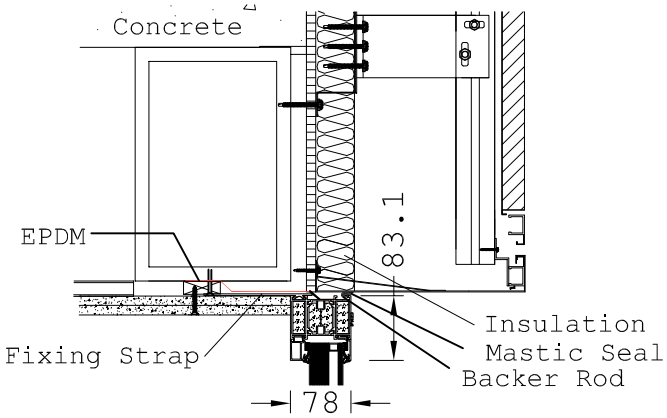

Detail B

PLEASE NOTE:
VIEWED FROM THE OUTSIDE UNLESS STATED OTHERWISE

Product Description:

6No. Required

EI 60 Fire Rated
Fixed Light

Material:

Steel | **Aluminium** | Stainless

RAL: 7011

RAL Finish:

Matt | **Satin** | Gloss | Mill

Glass (Single):

mm N/A

Glass (DGU):

6mm Toughened Low E
12mm Spacer
25mm EI 60 Fire Glass

Ironmongery:

DRAWING FOR APPROVAL

Architectural Status - Please Advise

A☐ B☐ C☐ D☐

A - Proceed to Production - No comments
B - Incorporate Comments & Proceed to Production
C - Incorporate Comments & Resubmit for Approval
D - Resubmit for approval

Date: .....
Sign: .....
Print: .....

DATE	REV	DRAWN	DESCRIPTION
05-04-16	A	MJS	Fire Rated Window Changed

DRAWING TITLE: Fire Rated Fixed Light

SCALE: NTS	DRAWN: MJS	JOB NO: 26447	DRAWING NO: 006
DATE: 22-03-16	CHECK:	QUOTE NO: 131062	REVISION: A

REDSHIELD ENGINEERING LTD
Unit 1 Q F Industrial Estate
Lower Lane; West Yorkshire
BD4 8QR Bradford
Tel:01274 736254
FAX:01274 736258

CLIENT: N U Construction	PROJECT: Chancery House, Liverpool	DO NOT SCALE DIMENSION. IF IN DOUBT ASK. ALL DIMENSION ARE IN MILLIMETRES UNLESS OTHERWISE SPECIFIED. THE DRAWING IS COPYRIGHT

View from outside

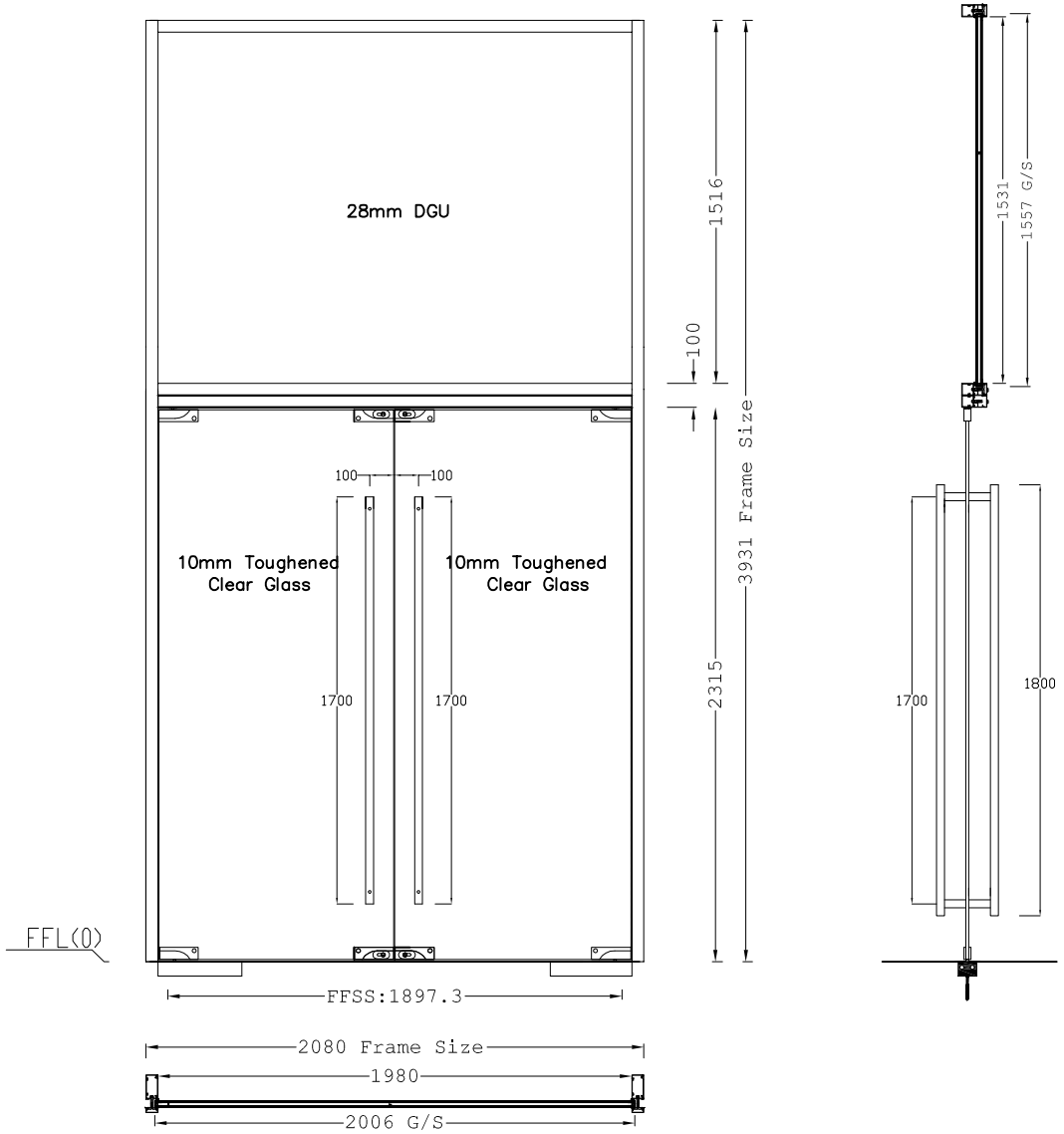

PLEASE NOTE:
VIEWED FROM THE OUTSIDE UNLESS STATED OTHERWISE

Product Description:

2No. Required

Auto Entrance Door To Open Out Elevation 1 & 2

Material:

Steel | **Aluminium** | Stainless

RAL: 7011

RAL Finish:

Matt | **Satin** | Gloss | Mill

Glass (Single):

10mm Toughened Clear (Door)

Glass (DGU):

8.8mm Clear Laminate

12mm Spacer

8mm Toughened Low E

Ironmongery:

Pull Handles Require Warm To Touch And There Will Need To Be Nylon Coated To Comply With Document M (RAL Colour TBC).

Max Length 1700mm

DRAWING FOR APPROVAL

Architectural Status - Please Advise

A☐ B☐ C☐ D☐

A - Proceed to Production - No comments
B - Incorporate Comments & Proceed to Production
C - Incorporate Comments & Resubmit for Approval
D - Resubmit for approval

Date: .....
Sign: .....
Print: .....

DATE	REV	DRAWN	DESCRIPTION
07-06-16	C	MJS	Door Size Changed
04-05-16	B	MJS	Door details changed To auto
05-04-16	A	MJS	Door details Changed

DRAWING TITLE: Entrance Doors

SCALE: NTS	DRAWN: MJS	JOB NO: 26447	DRAWING NO: 007
DATE: 22-03-16	CHECK:	QUOTE NO: 131062	REVISION: C

REDSHIELD ENGINEERING LTD
Unit 1 Q F Industrial Estate
Lower Lane; West Yorkshire
BD4 8QR Bradford
Tel:01274 736254
FAX:01274 736258

CLIENT: N U Construction	PROJECT: Chancery House, Liverpool	DO NOT SCALE DIMENSION. IF IN DOUBT ASK. ALL DIMENSION ARE IN MILLIMETRES UNLESS OTHERWISE SPECIFIED. THE DRAWING IS COPYRIGHT

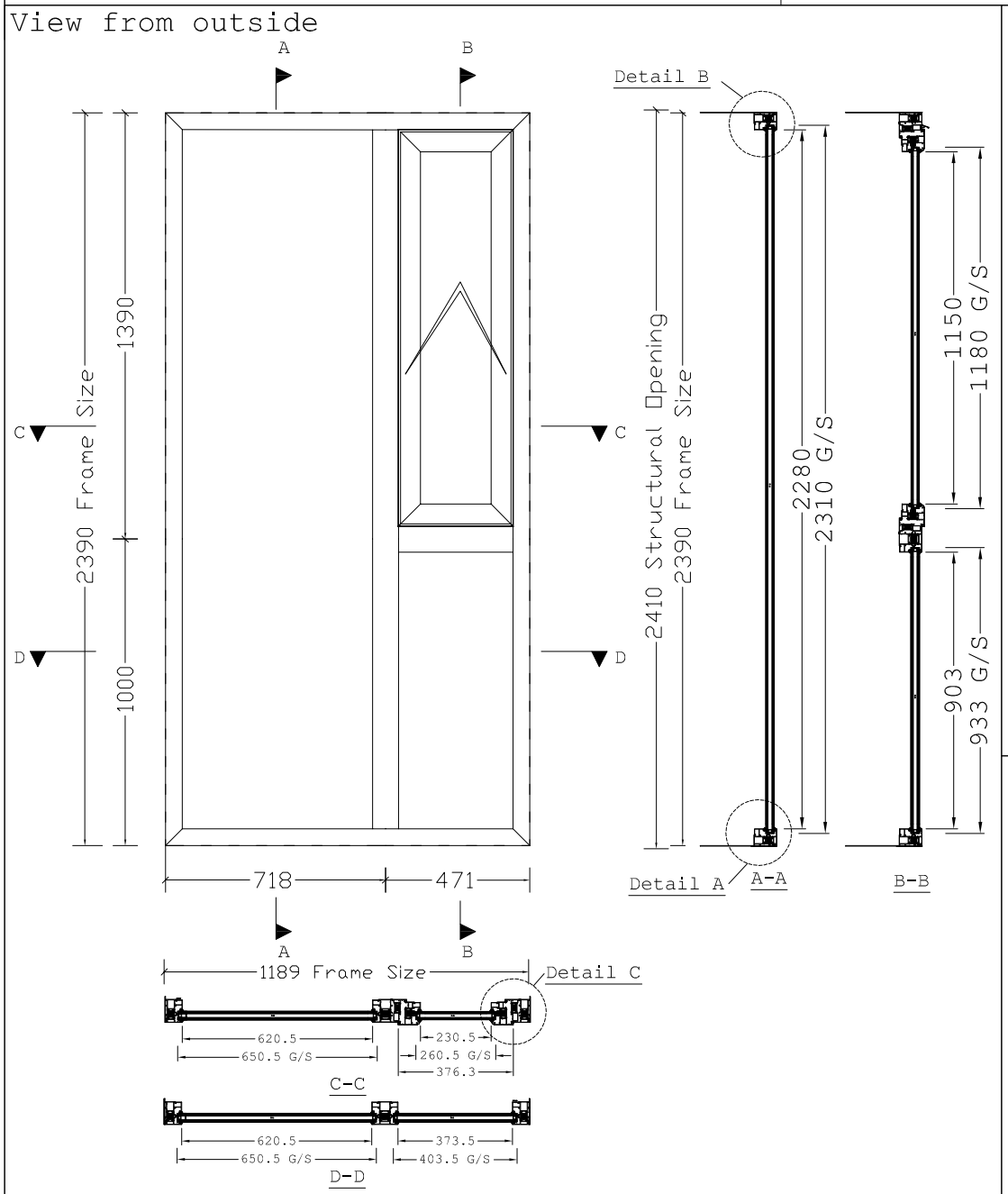

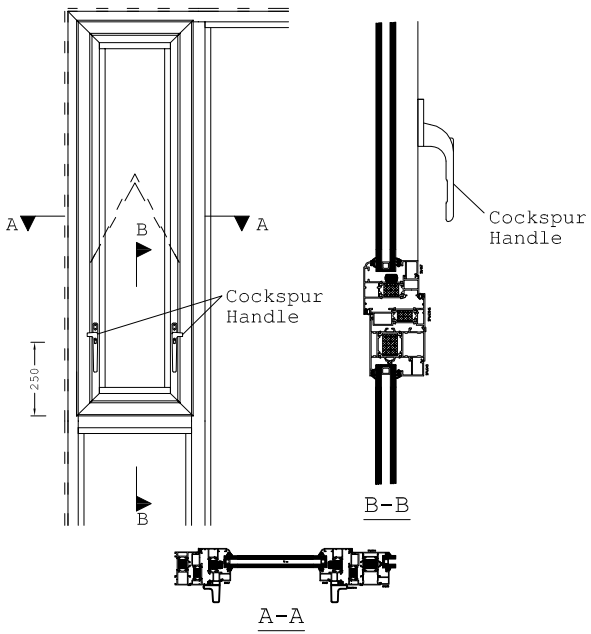

Interior View Of Vent Window

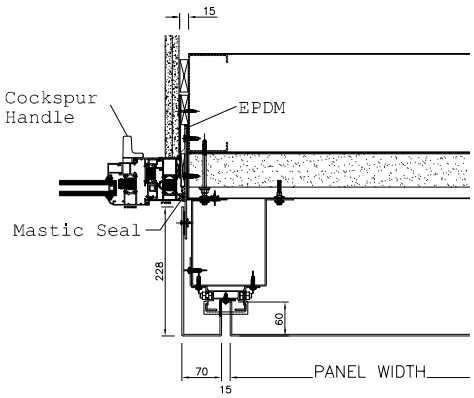

Detail C

PLEASE NOTE:
VIEWED FROM THE OUTSIDE UNLESS STATED OTHERWISE

Product Description:

51No. Required

Vent Window

Material:

Steel | **Aluminium** | Stainless

RAL: 7011

RAL Finish:

Matt | **Satin** | Gloss | Mill

Glass (Single):

mm N/A

Glass (DGU):

8.8mm Clear Laminate

12mm Spacer

8mm Toughened Low E

Ironmongery:

2No. Cockspur Handles

DRAWING FOR APPROVAL

Architectural Status - Please Advise

A☐ B☐ C☐ D☐

A - Proceed to Production - No comments
B - Incorporate Comments & Proceed to Production
C - Incorporate Comments & Resubmit for Approval
D - Resubmit for approval

Date: .....
Sign: .....
Print: .....

DATE	REV	DRAWN	DESCRIPTION

DRAWING TITLE: Typical Window Elevation/Details

SCALE: NTS	DRAWN: MJS	JOB NO: 26447	DRAWING NO: 009
DATE: 22-03-16	CHECK:	QUOTE NO: 131062	REVISION:

REDSHIELD ENGINEERING LTD
Unit 1 Q F Industrial Estate
Lower Lane; West Yorkshire
BD4 8QR Bradford
Tel:01274 736254
FAX:01274 736258

CLIENT: N U Construction	PROJECT: Chancery House, Liverpool	DO NOT SCALE DIMENSION. IF IN DOUBT ASK. ALL DIMENSION ARE IN MILLIMETRES UNLESS OTHERWISE SPECIFIED. THE DRAWING IS COPYRIGHT

View from outside

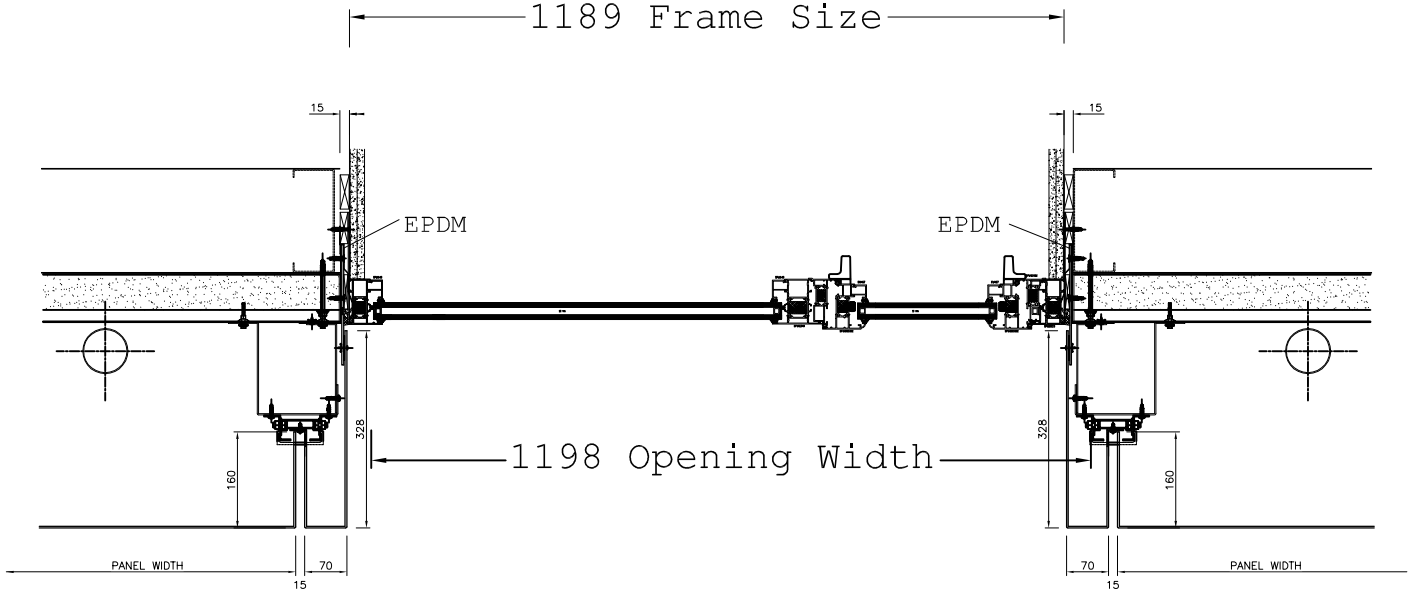

Fixing Detail Of Window

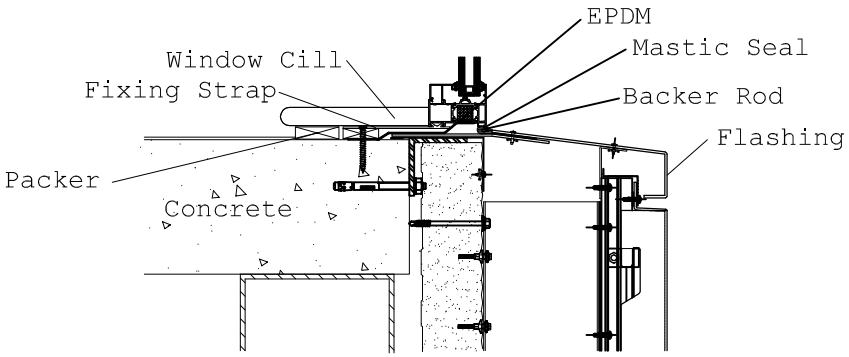

Detail A

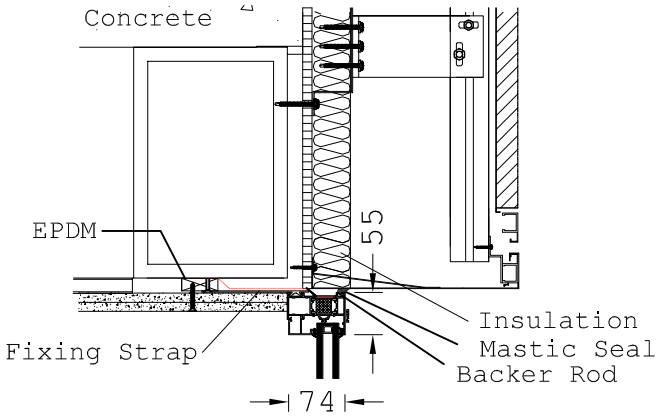

Detail B

PLEASE NOTE:
VIEWED FROM THE OUTSIDE UNLESS STATED OTHERWISE

Product Description:

51No. Required

Vent Window

Material:

Steel | **Aluminium** | Stainless

RAL: 7011

RAL Finish:

Matt | **Satin** | Gloss | Mill

Glass (Single):

mm N/A

Glass (DGU):

8.8mm Clear Laminate

12mm Spacer

8mm Toughened Low E

Ironmongery:

2No. Cockspur Handles

DRAWING FOR APPROVAL

Architectural Status - Please Advise

A☐ B☐ C☐ D☐

A - Proceed to Production - No comments
B - Incorporate Comments & Proceed to Production
C - Incorporate Comments & Resubmit for Approval
D - Resubmit for approval

Date: .....
Sign: .....
Print: .....

DATE	REV	DRAWN	DESCRIPTION
16-06-16	A	MJS	Location Of EPDM Added

DRAWING TITLE: Typical Window Details

SCALE: NTS	DRAWN: MJS	JOB NO: 26447	DRAWING NO: 010
DATE: 22-03-16	CHECK:	QUOTE NO: 131062	REVISION: A

REDSHIELD ENGINEERING LTD
Unit 1 Q F Industrial Estate
Lower Lane; West Yorkshire
BD4 8QR Bradford
Tel:01274 736254
FAX:01274 736258

CLIENT: N U Construction	PROJECT: Chancery House, Liverpool	DO NOT SCALE DIMENSION. IF IN DOUBT ASK. ALL DIMENSION ARE IN MILLIMETRES UNLESS OTHERWISE SPECIFIED. THE DRAWING IS COPYRIGHT

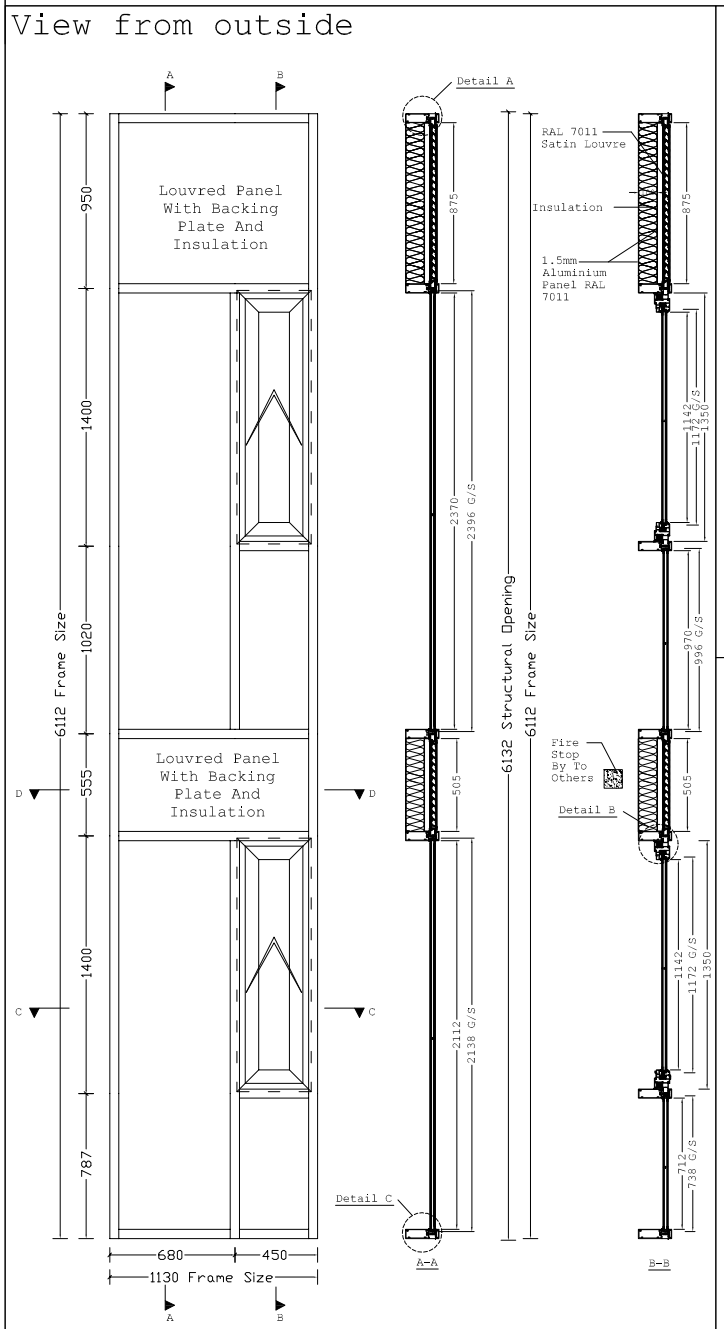

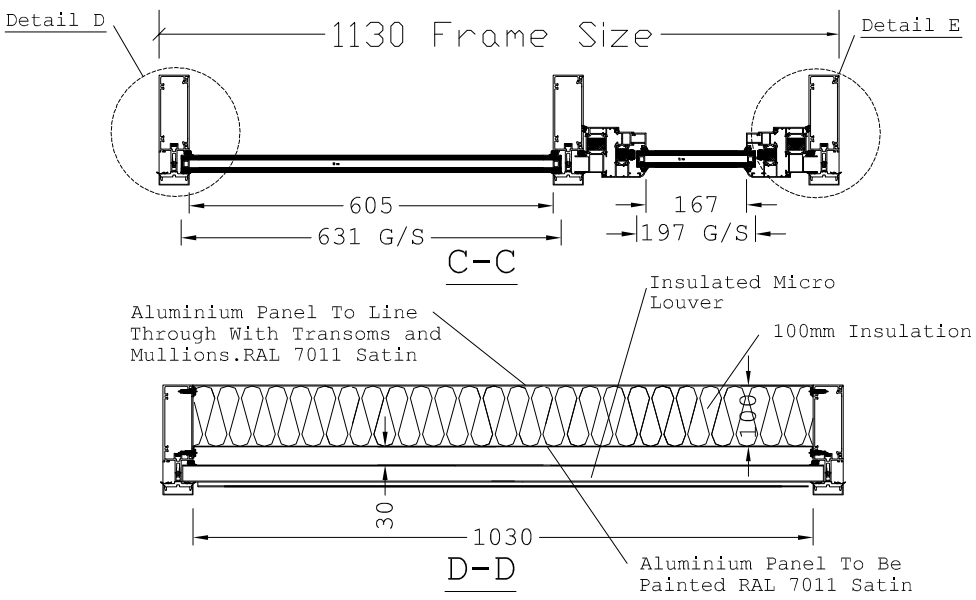

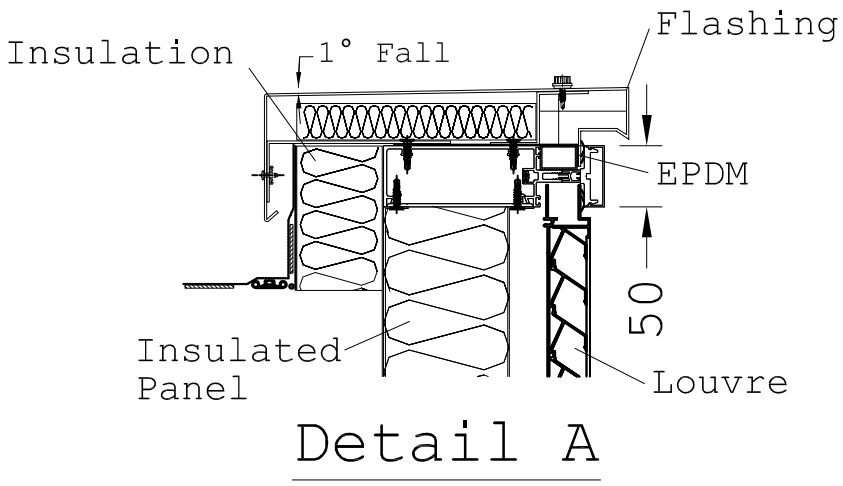

PLEASE NOTE:
VIEWED FROM THE OUTSIDE UNLESS STATED OTHERWISE

Product Description:

25No. Required

Curtain Wall Pod With Louvre And Insulated Panel

Material:

Steel | **Aluminium** | Stainless

RAL: 7011

RAL Finish:

Matt | **Satin** | Gloss | Mill

Glass (Single):

mm N/A

Glass (DGU):

8.8mm Clear Laminate

12mm Spacer

8mm Toughened Low E

Ironmongery:

2No. Cockspur Handles

DRAWING FOR APPROVAL

Architectural Status - Please Advise

A☐ B☐ C☐ D☐

A - Proceed to Production - No comments
B - Incorporate Comments & Proceed to Production
C - Incorporate Comments & Resubmit for Approval
D - Resubmit for approval

Date: .....
Sign: .....
Print: .....

DATE	REV	DRAWN	DESCRIPTION
15-06-16	C	MJS	Opaque Lookalike Changed To Louvre Panel/Details Changed
07-06-16	B	MJS	Insulated Panel Changed
05-04-16	A	MJS	Spandrel Panel Added

DRAWING TITLE: Curtain Wall Pod Elevation/Details

SCALE: NTS	DRAWN: MJS	JOB NO: 26447	DRAWING NO: 011
DATE: 22-03-16	CHECK:	QUOTE NO: 131062	REVISION: C

REDSHIELD ENGINEERING LTD
Unit 1 Q F Industrial Estate
Lower Lane; West Yorkshire
BD4 8QR Bradford
Tel:01274 736254
FAX:01274 736258

CLIENT: N U Construction	PROJECT: Chancery House, Liverpool	DO NOT SCALE DIMENSION. IF IN DOUBT ASK. ALL DIMENSION ARE IN MILLIMETRES UNLESS OTHERWISE SPECIFIED. THE DRAWING IS COPYRIGHT

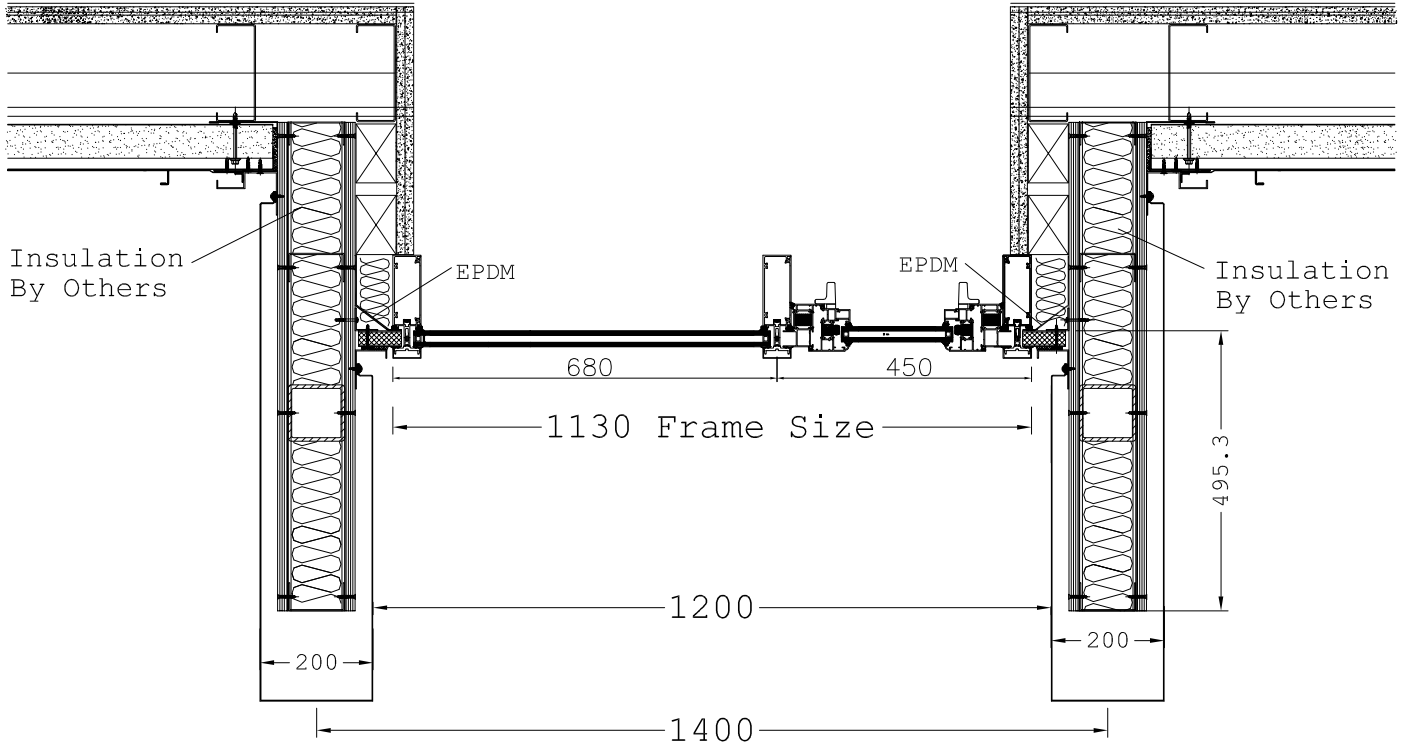

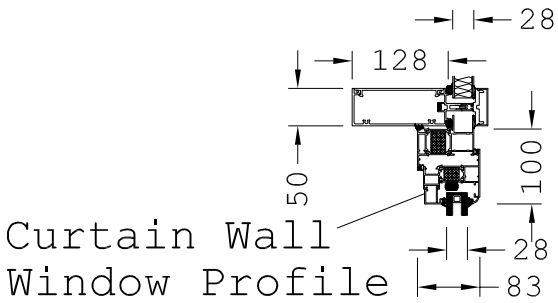

Detail B

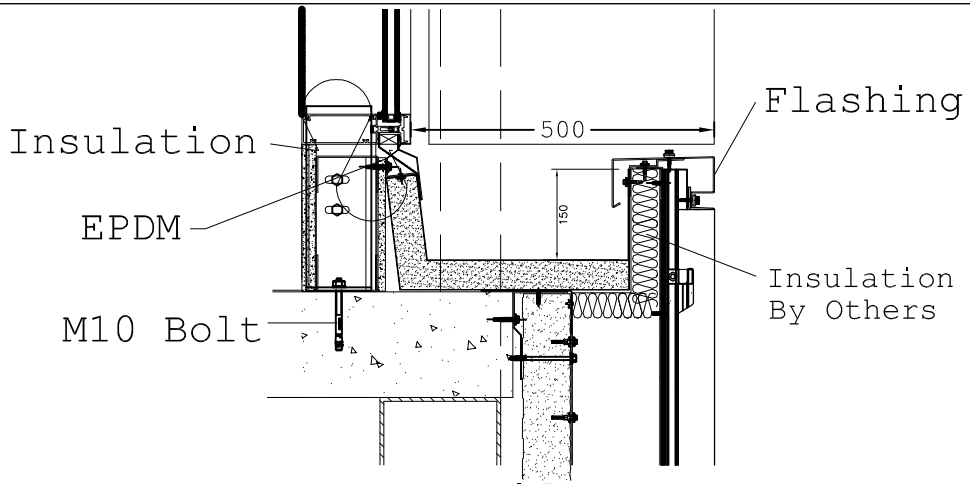

Detail C

PLEASE NOTE:
VIEWED FROM THE OUTSIDE UNLESS STATED OTHERWISE

Product Description:

25No. Required

Curtain Wall Pod

Material:

Steel | **Aluminium** | Stainless

RAL: 7011

RAL Finish:

Matt | **Satin** | Gloss | Mill

Glass (Single):

mm N/A

Glass (DGU):

8.8mm Clear Laminate

12mm Spacer

8mm Toughened Low E

Ironmongery:

2No. Cockspur Handles

DRAWING FOR APPROVAL

Architectural Status - Please Advise

A☐ B☐ C☐ D☐

A - Proceed to Production - No comments
B - Incorporate Comments & Proceed to Production
C - Incorporate Comments & Resubmit for Approval
D - Resubmit for approval

Date: .....
Sign: .....
Print: .....

DATE	REV	DRAWN	DESCRIPTION
16-06-16	B	MJS	Details Altered/EPDM Shown
05-04-16	A	MJS	Details Altered

DRAWING TITLE: Curtain Wall Pod Plan/Details

SCALE: NTS	DRAWN: MJS	JOB NO: 26447	DRAWING NO: 012
DATE: 22-03-16	CHECK:	QUOTE NO: 131062	REVISION: B

REDSHIELD ENGINEERING LTD
Unit 1 Q F Industrial Estate
Lower Lane; West Yorkshire
BD4 8QR Bradford
Tel:01274 736254
FAX:01274 736258

CLIENT: N U Construction	PROJECT: Chancery House, Liverpool	DO NOT SCALE DIMENSION. IF IN DOUBT ASK. ALL DIMENSION ARE IN MILLIMETRES UNLESS OTHERWISE SPECIFIED. THE DRAWING IS COPYRIGHT

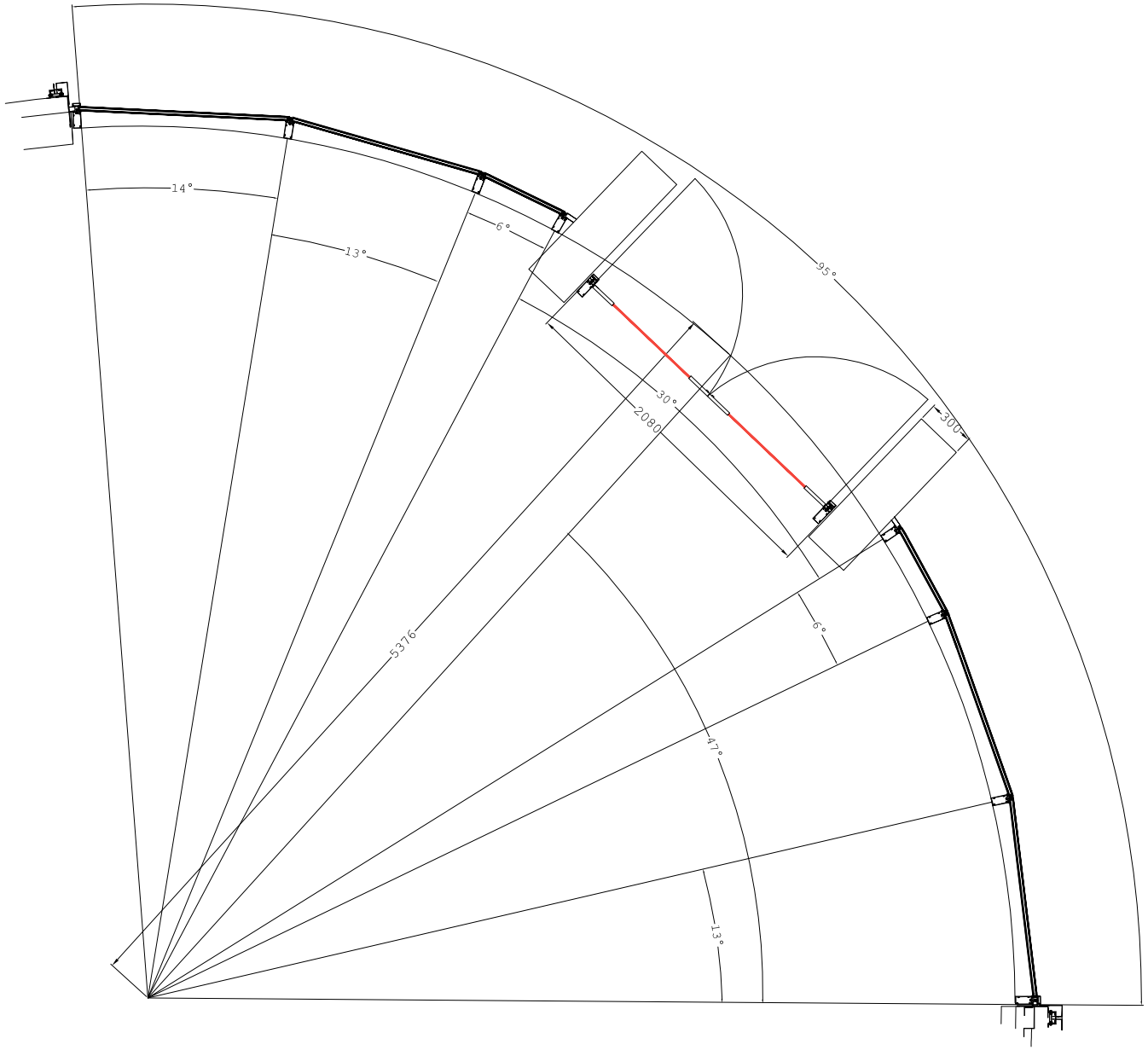

PLEASE NOTE:
VIEWED FROM THE OUTSIDE UNLESS STATED OTHERWISE

Product Description:

1No. Required

Facetted Curtain Wall
With Auto Door

Material:

Steel | **Aluminium** | Stainless

RAL: 7011

RAL Finish:

Matt | **Satin** | Gloss | Mill

Glass (Single):

mm N/A

Glass (DGU):

8.8mm Clear Laminate

12mm Spacer

8mm Toughened Low E

Ironmongery:

DRAWING FOR APPROVAL

Architectural Status - Please Advise

A☐ B☐ C☐ D☐

A - Proceed to Production - No comments
B - Incorporate Comments & Proceed to Production
C - Incorporate Comments & Resubmit for Approval
D - Resubmit for approval

Date: .....

Sign: .....

Print: .....

DATE	REV	DRAWN	DESCRIPTION
07-06-16	B	MJS	Facetted Screen Split into Two to Allow for Auto Double Door
04-05-16	A	MJS	Facetted Screen Split into Two to Allow for Auto Double Door

DRAWING TITLE:

Elevation 2 - Facetted Curtain Wall With Auto Door

SCALE: NTS	DRAWN: MJS	JOB NO: 26447	DRAWING NO: 013
DATE: 22-03-16	CHECK:	QUOTE NO: 131062	REVISION: B

REDSHIELD ENGINEERING LTD
Unit 1 Q F Industrial Estate
Lower Lane; West Yorkshire
BD4 8QR Bradford
Tel:01274 736254
FAX:01274 736258

CLIENT: N U Construction	PROJECT: Chancery House, Liverpool	DO NOT SCALE DIMENSION. IF IN DOUBT ASK. ALL DIMENSION ARE IN MILLIMETRES UNLESS OTHERWISE SPECIFIED. THE DRAWING IS COPYRIGHT

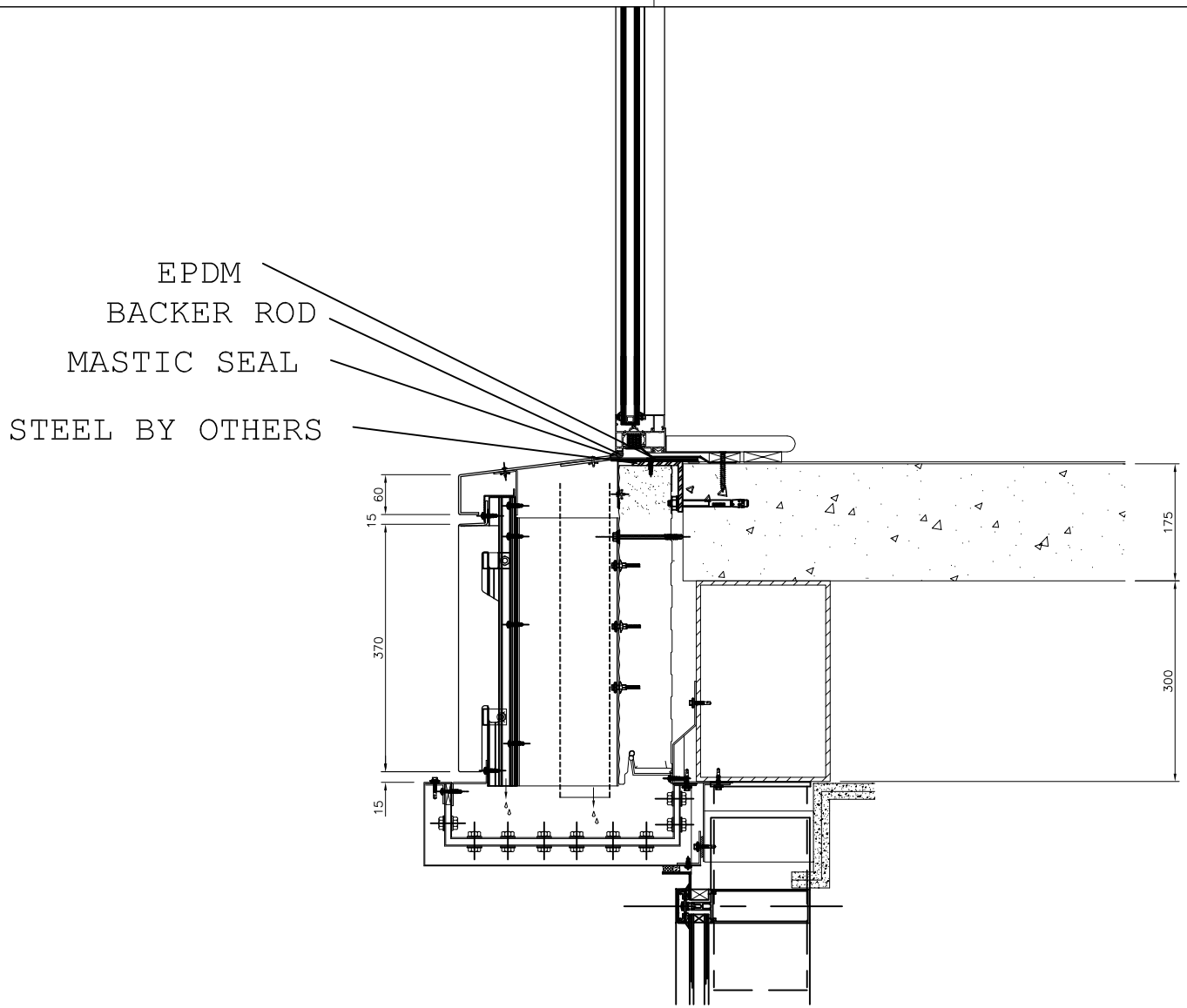

First Floor Section Through

PLEASE NOTE:
VIEWED FROM THE OUTSIDE UNLESS STATED OTHERWISE

Product Description:

Section Through First Floor

Material:

Steel | **Aluminium** | Stainless

RAL: 7011

RAL Finish:

Matt | **Satin** | Gloss | Mill

Glass (Single):

mm N/A

Glass (DGU):

8.8mm Clear Laminate

12mm Spacer

8mm Toughened Low E

Ironmongery:

DRAWING FOR APPROVAL

Architectural Status - Please Advise

A☐ B☐ C☐ D☐

A - Proceed to Production - No comments
B - Incorporate Comments & Proceed to Production
C - Incorporate Comments & Resubmit for Approval
D - Resubmit for approval

Date: .....
Sign: .....
Print: .....

DATE	REV	DRAWN	DESCRIPTION

DRAWING TITLE: First Floor Section Through			
SCALE: NTS	DRAWN: MJS	JOB NO: 26447	DRAWING NO: 014
DATE: 22-03-16	CHECK:	QUOTE NO: 131062	REVISION:

REDSHIELD ENGINEERING LTD
Unit 1 Q F Industrial Estate
Lower Lane; West Yorkshire
BD4 8QR Bradford
Tel:01274 736254
FAX:01274 736258

CLIENT:	PROJECT:	
N U Construction	Chancery House, Liverpool	DO NOT SCALE DIMENSION. IF IN DOUBT ASK. ALL DIMENSION ARE IN MILLIMETRES UNLESS OTHERWISE SPECIFIED. THE DRAWING IS COPYRIGHT

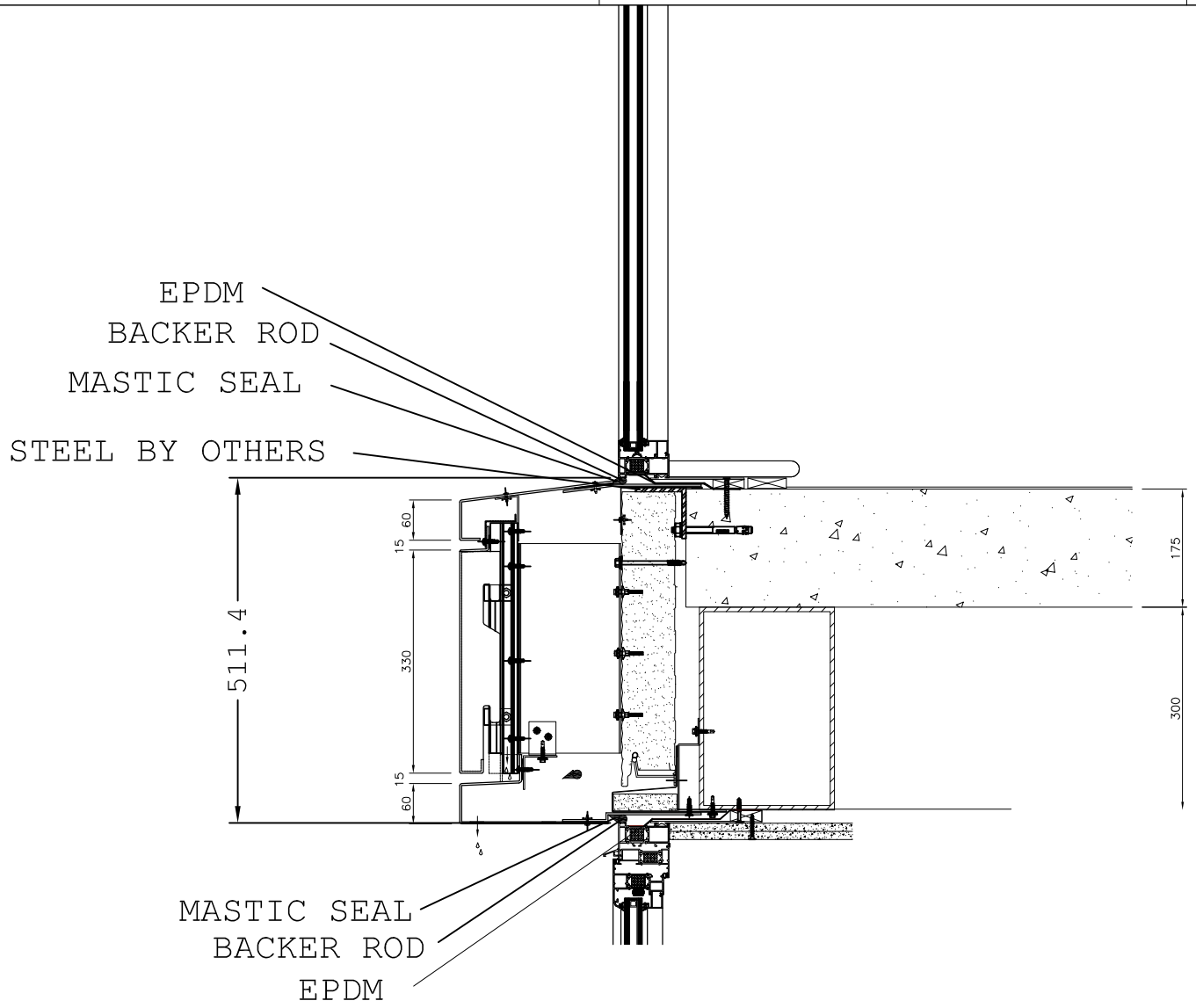

Second Floor Section Through

PLEASE NOTE:
VIEWED FROM THE OUTSIDE UNLESS STATED OTHERWISE

Product Description:

Section Through Second Floor

Material:

Steel | **Aluminium** | Stainless

RAL: 7011

RAL Finish:

Matt | **Satin** | Gloss | Mill

Glass (Single):

mm N/A

Glass (DGU):

8.8mm Clear Laminate

12mm Spacer

8mm Toughened Low E

Ironmongery:

DRAWING FOR APPROVAL

Architectural Status - Please Advise

A☐ B☐ C☐ D☐

A - Proceed to Production - No comments
B - Incorporate Comments & Proceed to Production
C - Incorporate Comments & Resubmit for Approval
D - Resubmit for approval

Date: .....
Sign: .....
Print: .....

DATE	REV	DRAWN	DESCRIPTION

DRAWING TITLE: Second Floor Section Through			
SCALE: NTS	DRAWN: MJS	JOB NO: 26447	DRAWING NO: 015
DATE: 22-03-16	CHECK:	QUOTE NO: 131062	REVISION:

REDSHIELD ENGINEERING LTD
Unit 1 Q F Industrial Estate
Lower Lane; West Yorkshire
BD4 8QR Bradford
Tel:01274 736254
FAX:01274 736258

CLIENT:	PROJECT:	
N U Construction	Chancery House, Liverpool	DO NOT SCALE DIMENSION. IF IN DOUBT ASK. ALL DIMENSION ARE IN MILLIMETRES UNLESS OTHERWISE SPECIFIED. THE DRAWING IS COPYRIGHT

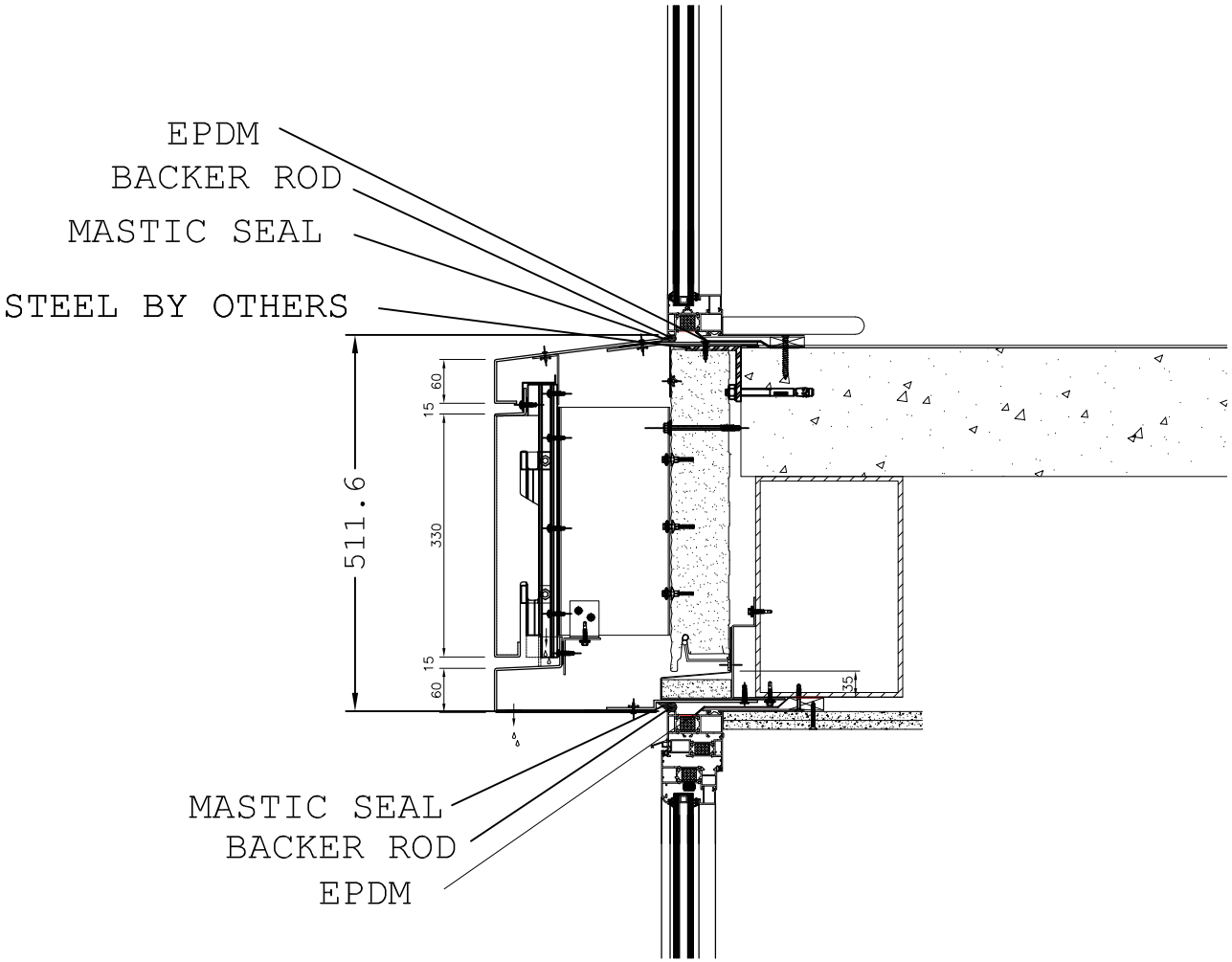

Third Floor Section Through

PLEASE NOTE:
VIEWED FROM THE OUTSIDE UNLESS STATED OTHERWISE

Product Description:

Section Through Third Floor

Material:

Steel | **Aluminium** | Stainless

RAL: 7011

RAL Finish:

Matt | **Satin** | Gloss | Mill

Glass (Single):

mm N/A

Glass (DGU):

8.8mm Clear Laminate

12mm Spacer

8mm Toughened Low E

Ironmongery:

DRAWING FOR APPROVAL

Architectural Status - Please Advise

A☐ B☐ C☐ D☐

A - Proceed to Production - No comments
B - Incorporate Comments & Proceed to Production
C - Incorporate Comments & Resubmit for Approval
D - Resubmit for approval

Date: .....
Sign: .....
Print: .....

DATE	REV	DRAWN	DESCRIPTION

DRAWING TITLE: Third Floor Section Through

SCALE: NTS	DRAWN: MJS	JOB NO: 26447	DRAWING NO: 016
DATE: 22-03-16	CHECK:	QUOTE NO: 131062	REVISION:

REDSHIELD ENGINEERING LTD
Unit 1 Q F Industrial Estate
Lower Lane; West Yorkshire
BD4 8QR Bradford
Tel:01274 736254
FAX:01274 736258

CLIENT:	PROJECT:	
N U Construction	Chancery House, Liverpool	DO NOT SCALE DIMENSION. IF IN DOUBT ASK. ALL DIMENSION ARE IN MILLIMETRES UNLESS OTHERWISE SPECIFIED. THE DRAWING IS COPYRIGHT

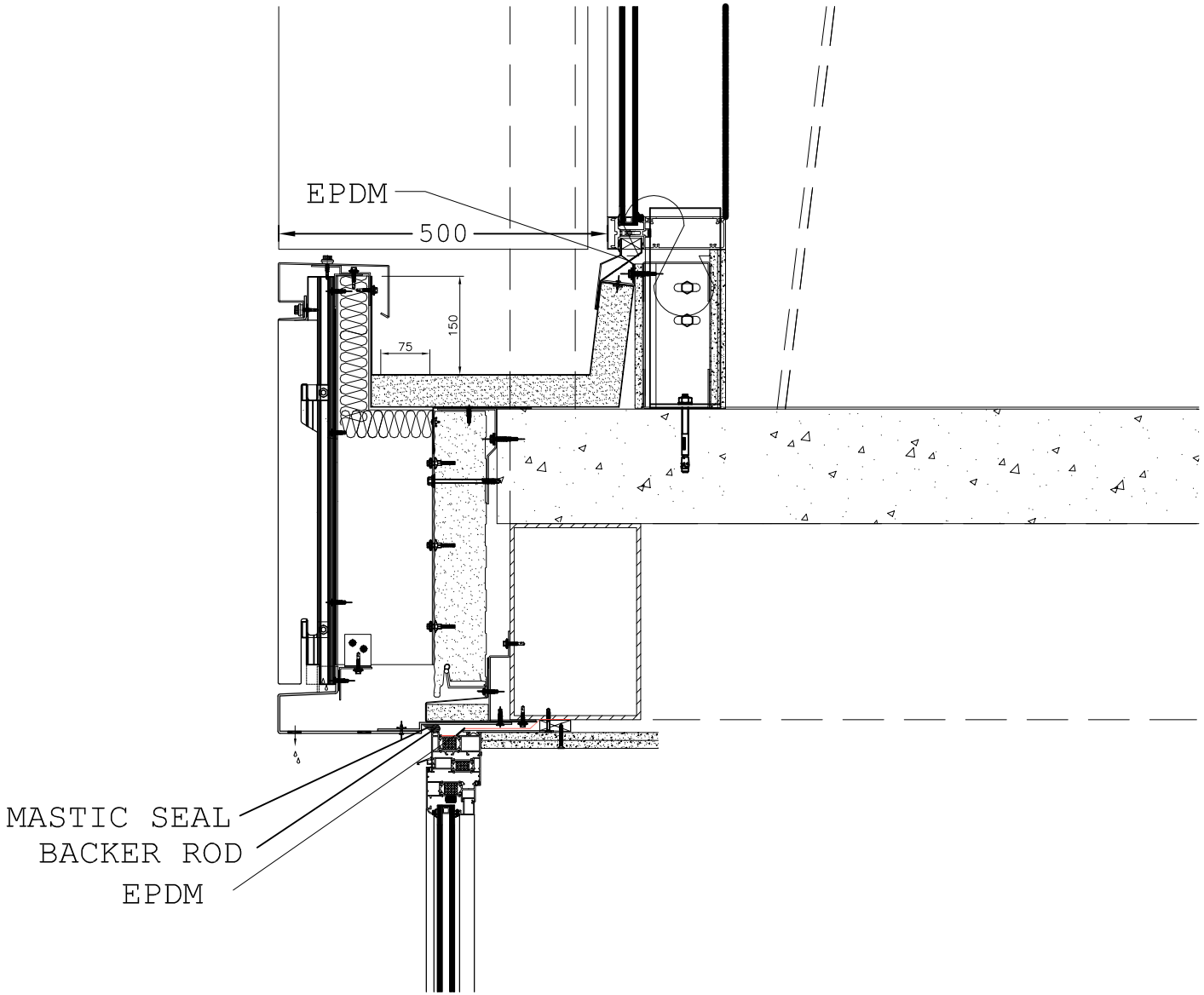

Fourth Floor Section Through

PLEASE NOTE:
VIEWED FROM THE OUTSIDE UNLESS STATED OTHERWISE

Product Description:

Section Through Fourth Floor

Material:

Steel | **Aluminium** | Stainless

RAL: 7011

RAL Finish:

Matt | **Satin** | Gloss | Mill

Glass (Single):

mm N/A

Glass (DGU):

8.8mm Clear Laminate

12mm Spacer

8mm Toughened Low E

Ironmongery:

DRAWING FOR APPROVAL

Architectural Status - Please Advise

A☐ B☐ C☐ D☐

A - Proceed to Production - No comments
B - Incorporate Comments & Proceed to Production
C - Incorporate Comments & Resubmit for Approval
D - Resubmit for approval

Date: .....
Sign: .....
Print: .....

DATE	REV	DRAWN	DESCRIPTION
16-06-16	B	MJS	EPDM Added
05-04-16	A	MJS	Detail Changed

DRAWING TITLE: Fourth Floor Section Through

SCALE:	DRAWN:	JOB NO:	DRAWING NO:
NTS	MJS	26447	017
DATE: 22-03-16	CHECK:	QUOTE NO: 131062	REVISION: B

REDSHIELD ENGINEERING LTD
Unit 1 Q F Industrial Estate
Lower Lane; West Yorkshire
BD4 8QR Bradford
Tel:01274 736254
FAX:01274 736258

CLIENT: N U Construction	PROJECT: Chancery House, Liverpool	DO NOT SCALE DIMENSION. IF IN DOUBT ASK. ALL DIMENSION ARE IN MILLIMETRES UNLESS OTHERWISE SPECIFIED. THE DRAWING IS COPYRIGHT

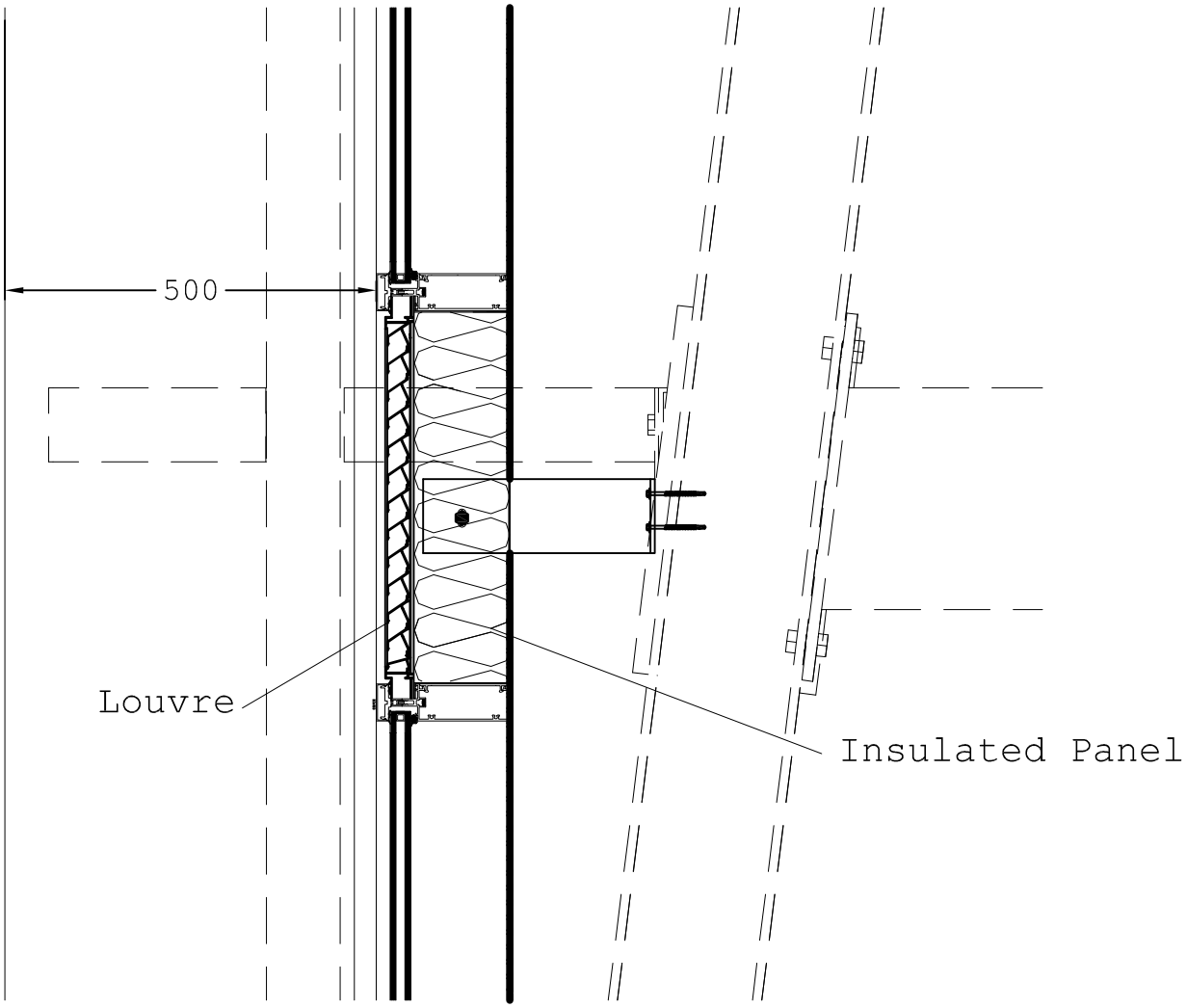

Fifth Floor Section Through

PLEASE NOTE:
VIEWED FROM THE OUTSIDE UNLESS STATED OTHERWISE

Product Description:

Section Through Fifth Floor

Material:

Steel | **Aluminium** | Stainless

RAL: 7011

RAL Finish:

Matt | **Satin** | Gloss | Mill

Glass (Single):

mm N/A

Glass (DGU):

8.8mm Clear Laminate

12mm Spacer

8mm Toughened Low E

Ironmongery:

DRAWING FOR APPROVAL

Architectural Status - Please Advise

A☐ B☐ C☐ D☐

A - Proceed to Production - No comments
B - Incorporate Comments & Proceed to Production
C - Incorporate Comments & Resubmit for Approval
D - Resubmit for approval

Date: .....
Sign: .....
Print: .....

DATE	REV	DRAWN	DESCRIPTION
16-06-16	B	MJS	Louvre Panel Added
05-04-16	A	MJS	Detail Changed

DRAWING TITLE: Fifth Floor Section Through

SCALE: NTS	DRAWN: MJS	JOB NO: 26447	DRAWING NO: 018
DATE: 22-03-16	CHECK:	QUOTE NO: 131062	REVISION: B

REDSHIELD ENGINEERING LTD
Unit 1 Q F Industrial Estate
Lower Lane; West Yorkshire
BD4 8QR Bradford
Tel:01274 736254
FAX:01274 736258

CLIENT: N U Construction	PROJECT: Chancery House, Liverpool	DO NOT SCALE DIMENSION. IF IN DOUBT ASK. ALL DIMENSION ARE IN MILLIMETRES UNLESS OTHERWISE SPECIFIED. THE DRAWING IS COPYRIGHT

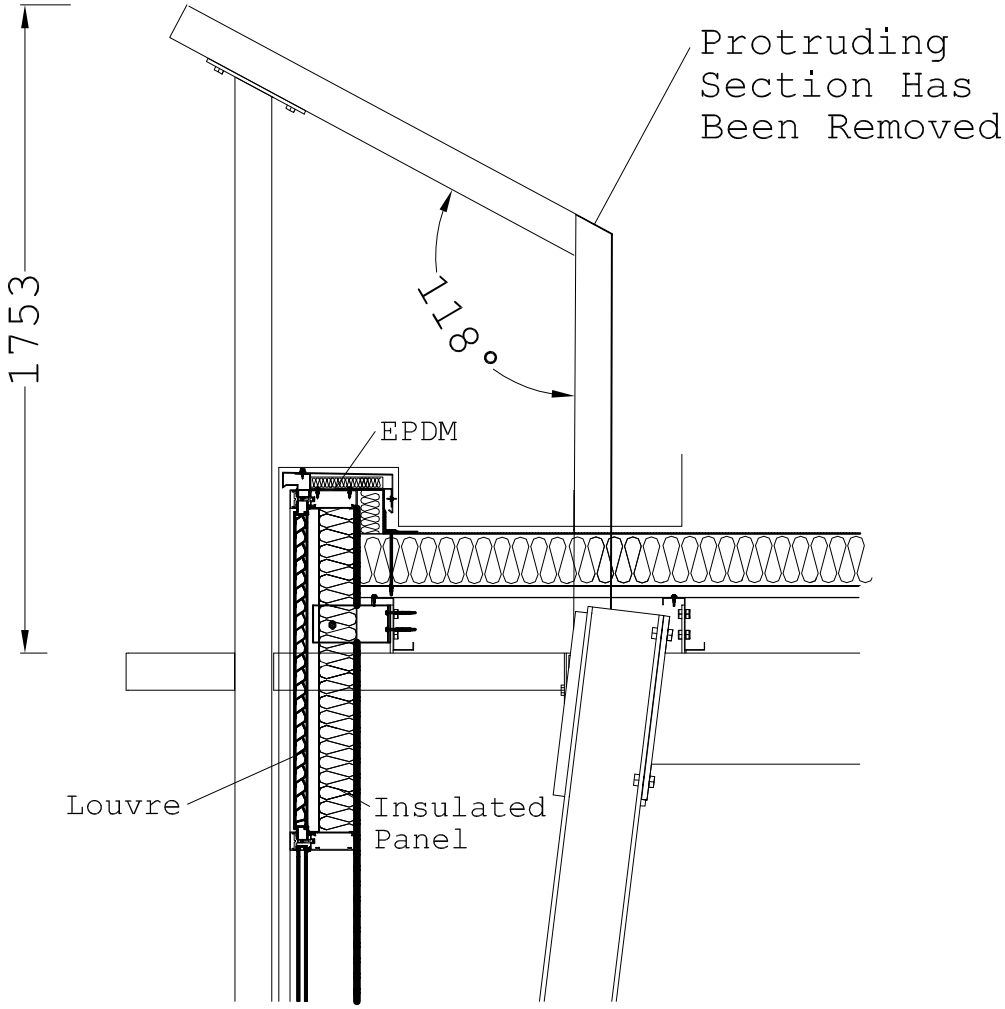

Revised Pod Detail

PLEASE NOTE:
VIEWED FROM THE OUTSIDE UNLESS STATED OTHERWISE

Product Description:

Section Through Roof

Material:

Steel | **Aluminium** | Stainless

RAL: 7011

RAL Finish:

Matt | **Satin** | Gloss | Mill

Glass (Single):

mm N/A

Glass (DGU):

8.8mm Clear Laminate

12mm Spacer

8mm Toughened Low E

Ironmongery:

DRAWING FOR APPROVAL

Architectural Status - Please Advise

A☐ B☐ C☐ D☐

A - Proceed to Production - No comments
B - Incorporate Comments & Proceed to Production
C - Incorporate Comments & Resubmit for Approval
D - Resubmit for approval

Date: .....
Sign: .....
Print: .....

DATE	REV	DRAWN	DESCRIPTION
16-06-16	C	MJS	Louvre Panel Added
25-05-16	B	MJS	Roof Detail Changed
05-04-16	A	MJS	Roof Detail Changed

DRAWING TITLE: Roof Section Through

SCALE: NTS	DRAWN: MJS	JOB NO: 26447	DRAWING NO: 019
DATE: 22-03-16	CHECK:	QUOTE NO: 131062	REVISION: C

REDSHIELD ENGINEERING LTD
Unit 1 Q F Industrial Estate
Lower Lane; West Yorkshire
BD4 8QR Bradford
Tel:01274 736254
FAX:01274 736258

CLIENT:	PROJECT:	
N U Construction	Chancery House, Liverpool	DO NOT SCALE DIMENSION. IF IN DOUBT ASK. ALL DIMENSION ARE IN MILLIMETRES UNLESS OTHERWISE SPECIFIED. THE DRAWING IS COPYRIGHT

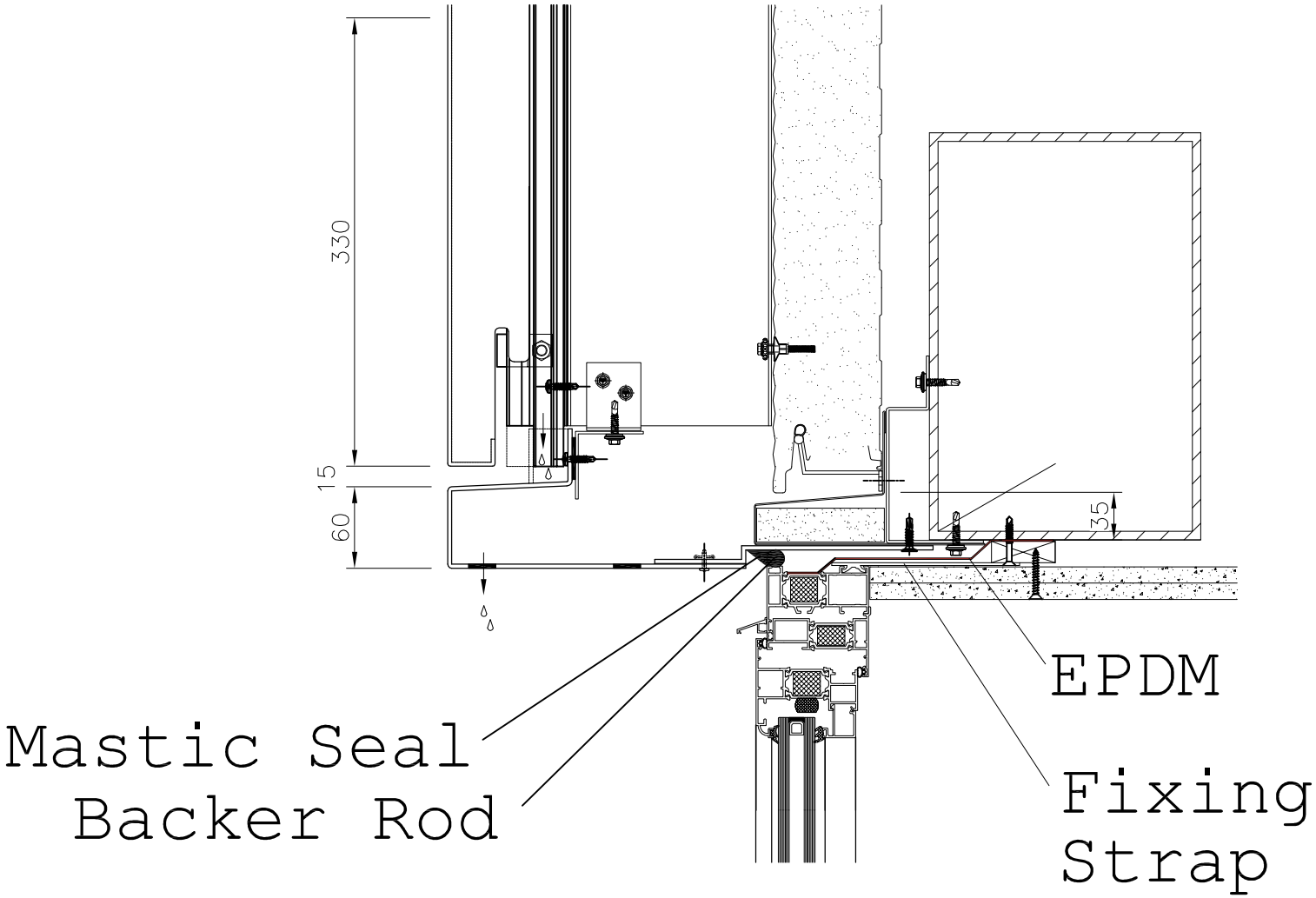

Window Head Detail

PLEASE NOTE:
VIEWED FROM THE OUTSIDE UNLESS STATED OTHERWISE

Product Description:

Window Head Detail

Material:

Steel | **Aluminium** | Stainless

RAL: 7011

RAL Finish:

Matt | **Satin** | Gloss | Mill

Glass (Single):

mm N/A

Glass (DGU):

8.8mm Clear Laminate

12mm Spacer

8mm Toughened Low E

Ironmongery:

DRAWING FOR APPROVAL

Architectural Status - Please Advise

A☐ B☐ C☐ D☐

A - Proceed to Production - No comments
B - Incorporate Comments & Proceed to Production
C - Incorporate Comments & Resubmit for Approval
D - Resubmit for approval

Date: .....
Sign: .....
Print: .....

DATE	REV	DRAWN	DESCRIPTION

DRAWING TITLE: Window - Head And Cill Details

SCALE:	DRAWN:	JOB NO:	DRAWING NO:
NTS	MJS	26447	020
DATE: 12-05-16	CHECK:	QUOTE NO: 131062	REVISION:

REDSHIELD ENGINEERING LTD
Unit 1 Q F Industrial Estate
Lower Lane; West Yorkshire
BD4 8QR Bradford
Tel:01274 736254
FAX:01274 736258

CLIENT:	PROJECT:	
N U Construction	Chancery House, Liverpool	DO NOT SCALE DIMENSION. IF IN DOUBT ASK. ALL DIMENSION ARE IN MILLIMETRES UNLESS OTHERWISE SPECIFIED. THE DRAWING IS COPYRIGHT

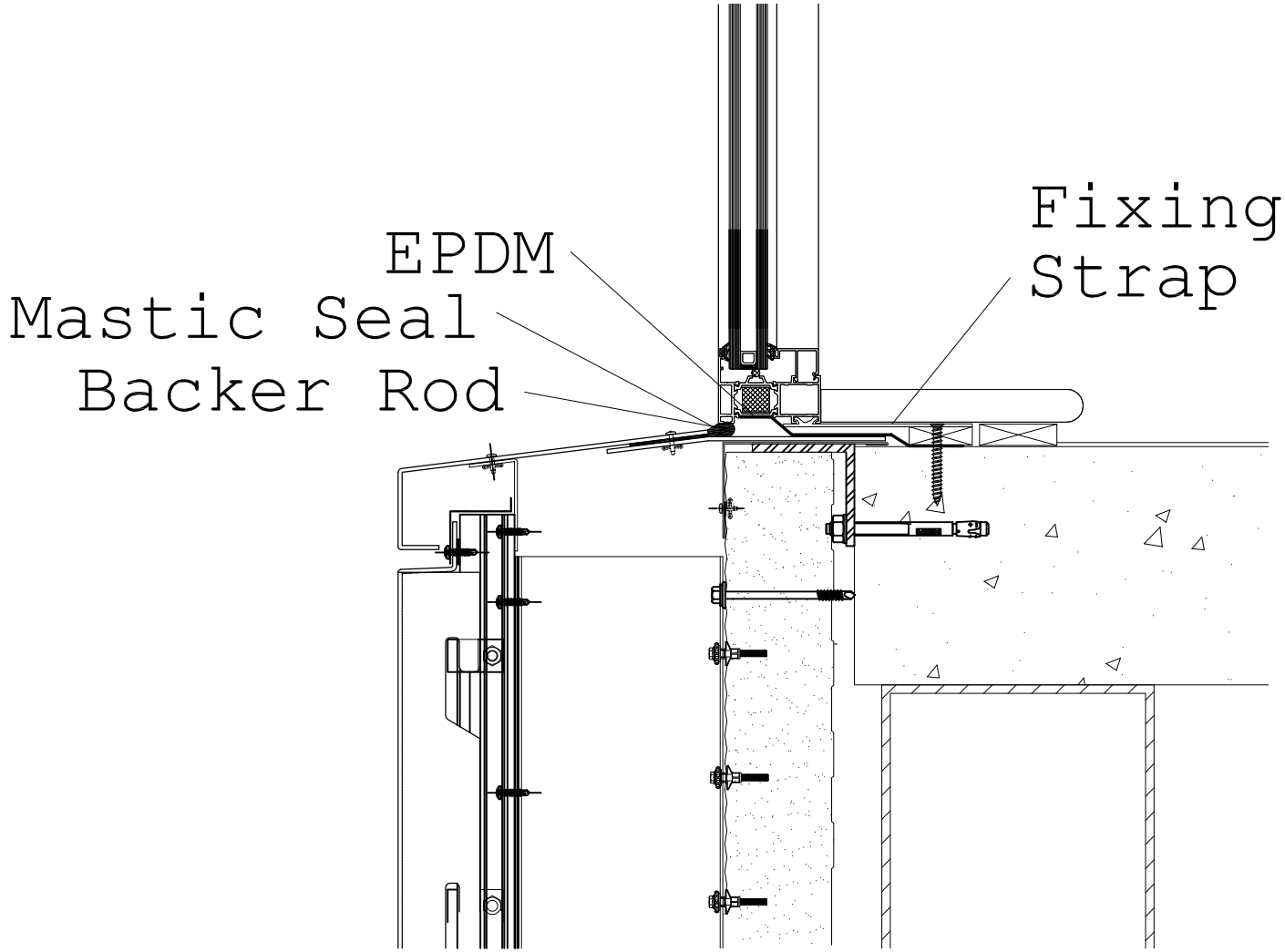

Window Bottom Detail

PLEASE NOTE:
VIEWED FROM THE OUTSIDE UNLESS STATED OTHERWISE

Product Description:

Window Bottom Detail

Material:

Steel | **Aluminium** | Stainless

RAL: 7011

RAL Finish:

Matt | **Satin** | Gloss | Mill

Glass (Single):

mm N/A

Glass (DGU):

8.8mm Clear Laminate

12mm Spacer

8mm Toughened Low E

Ironmongery:

DRAWING FOR APPROVAL

Architectural Status - Please Advise

A☐ B☐ C☐ D☐

A - Proceed to Production - No comments
B - Incorporate Comments & Proceed to Production
C - Incorporate Comments & Resubmit for Approval
D - Resubmit for approval

Date: .....

Sign: .....

Print: .....

DATE	REV	DRAWN	DESCRIPTION

DRAWING TITLE: Window Bottom

SCALE: NTS	DRAWN: MJS	JOB NO: 26447	DRAWING NO: 021
DATE: 12-05-16	CHECK:	QUOTE NO: 131062	REVISION:

REDSHIELD ENGINEERING LTD
Unit 1 Q F Industrial Estate
Lower Lane; West Yorkshire
BD4 8QR Bradford
Tel:01274 736254
FAX:01274 736258

CLIENT: N U Construction	PROJECT: Chancery House, Liverpool	DO NOT SCALE DIMENSION. IF IN DOUBT ASK. ALL DIMENSION ARE IN MILLIMETRES UNLESS OTHERWISE SPECIFIED. THE DRAWING IS COPYRIGHT

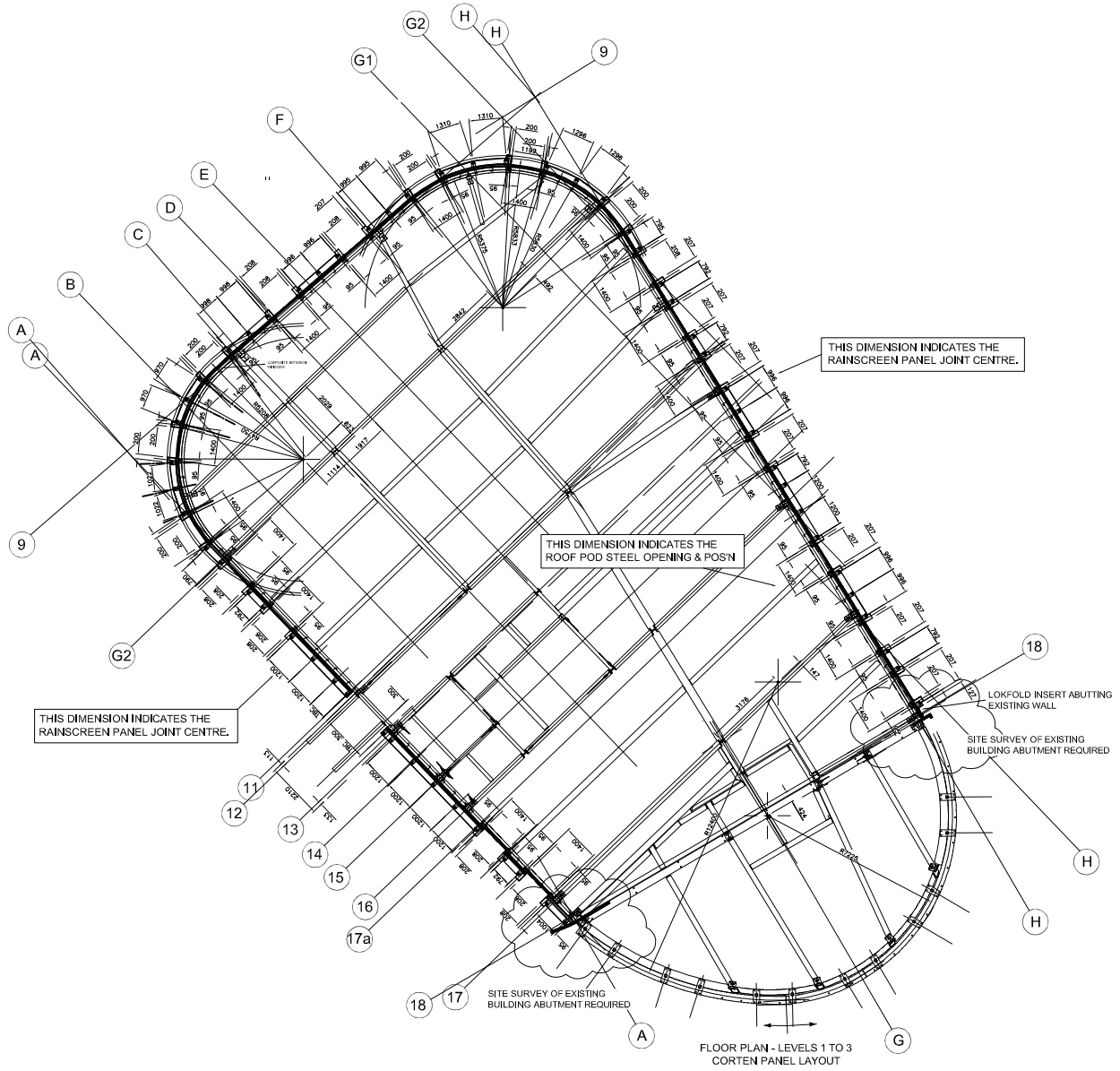

FLOOR PLAN - LEVELS 1 TO 3
CORTEN PANEL LAYOUT

PLEASE NOTE:
VIEWED FROM THE OUTSIDE UNLESS STATED OTHERWISE

Product Description:

Floor Levels 1-3 With Windows and Fire Rated Windows

Material:

Steel | **Aluminium** | Stainless

RAL: 7011

RAL Finish:

Matt | **Satin** | Gloss | Mill

Glass (Single):

mm N/A

Glass (DGU):

8.8mm Clear Laminate

12mm Spacer

8mm Toughened Low E

Ironmongery:

DRAWING FOR APPROVAL

Architectural Status - Please Advise

A☐ B☐ C☐ D☐

A - Proceed to Production - No comments
B - Incorporate Comments & Proceed to Production
C - Incorporate Comments & Resubmit for Approval
D - Resubmit for approval

Date: .....
Sign: .....
Print: .....

DATE	REV	DRAWN	DESCRIPTION

DRAWING TITLE: Floor Levels 1-3

SCALE: NTS	DRAWN: MJS	JOB NO: 26447	DRAWING NO: 022
DATE: 12-05-16	CHECK:	QUOTE NO: 131062	REVISION:

REDSHIELD ENGINEERING LTD
Unit 1 Q F Industrial Estate
Lower Lane; West Yorkshire
BD4 8QR Bradford
Tel:01274 736254
FAX:01274 736258

CLIENT:	PROJECT:	
N U Construction	Chancery House, Liverpool	DO NOT SCALE DIMENSION. IF IN DOUBT ASK. ALL DIMENSION ARE IN MILLIMETRES UNLESS OTHERWISE SPECIFIED. THE DRAWING IS COPYRIGHT

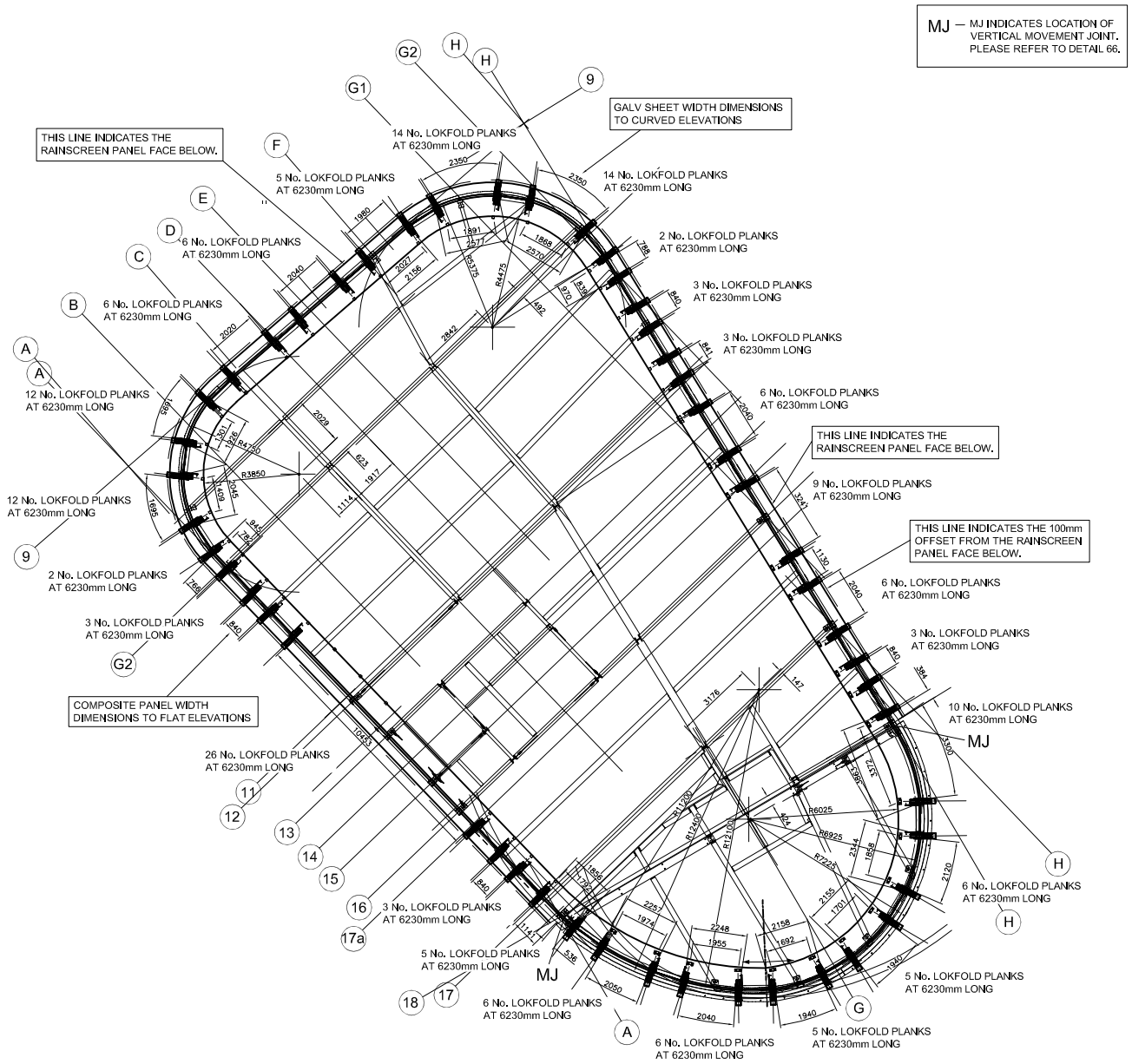

PLEASE NOTE:
VIEWED FROM THE OUTSIDE UNLESS STATED OTHERWISE

Product Description:

Floor Levels 4-5 With Pod Details

Material:

Steel | **Aluminium** | Stainless

RAL: 7011

RAL Finish:

Matt | **Satin** | Gloss | Mill

Glass (Single):

mm N/A

Glass (DGU):

8.8mm Clear Laminate

12mm Spacer

8mm Toughened Low E

Ironmongery:

DRAWING FOR APPROVAL

Architectural Status - Please Advise

A☐ B☐ C☐ D☐

A - Proceed to Production - No comments
B - Incorporate Comments & Proceed to Production
C - Incorporate Comments & Resubmit for Approval
D - Resubmit for approval

Date: .....
Sign: .....
Print: .....

DATE	REV	DRAWN	DESCRIPTION

DRAWING TITLE: Floor Levels 4-5

SCALE:	DRAWN:	JOB NO:	DRAWING NO:
NTS	MJS	26447	023
DATE: 06-06-16	CHECK:	QUOTE NO: 131062	REVISION:

REDSHIELD ENGINEERING LTD
Unit 1 Q F Industrial Estate
Lower Lane; West Yorkshire
BD4 8QR Bradford
Tel:01274 736254
FAX:01274 736258