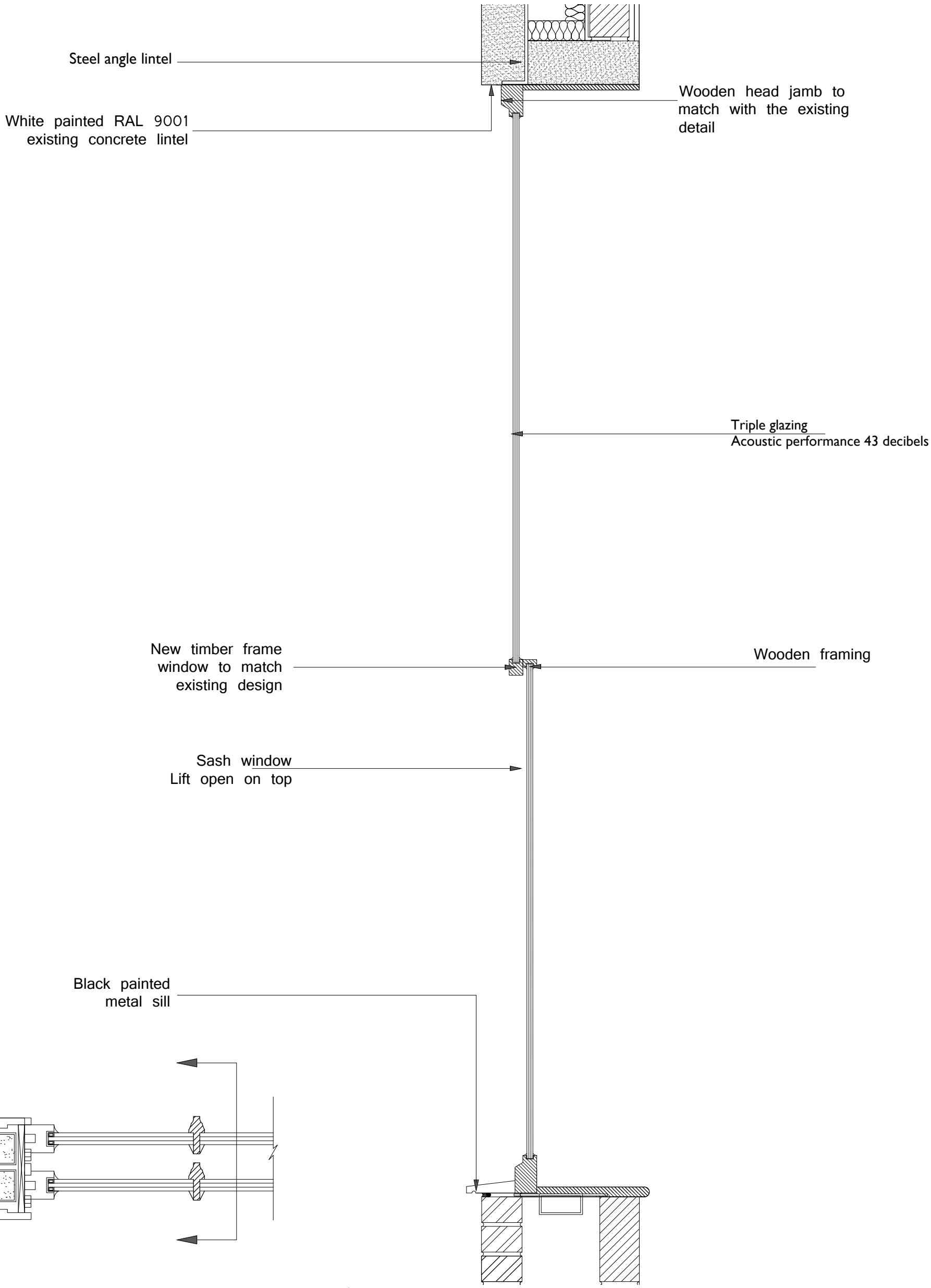

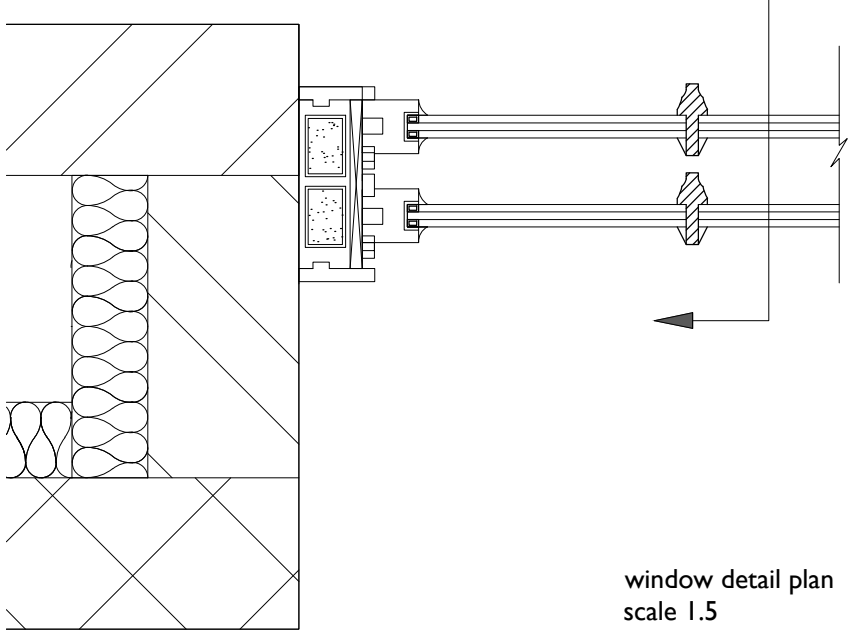

window detail plan
scale 1.5

Type 4 window detail
section
scale 1.10

Note: Pursuant to condition 4

Revision	Description	Date

Project
Jamaica Hotel
142-144 Upper Parliament Street
Liverpool L8 7LG

Drawing Name
Proposed new windows

Suburban Studios
www.suburbanstudios.co.uk
COOMBE FARM,
CR0 5HL
020-8654-2310
info@suburbanstudios.co.uk

Job No	090502	Date	29/06/15
Drawing Number	AP204 - 4	Rev	
Scale	1:5 ;1:10 @ A3		
Drawn:	SNR	Checked:	DV,AS

DO NOT SCALE FROM THIS DRAWING: Any drawing errors or divergences should be brought to the attention of SubUrban Studios at the address shown.