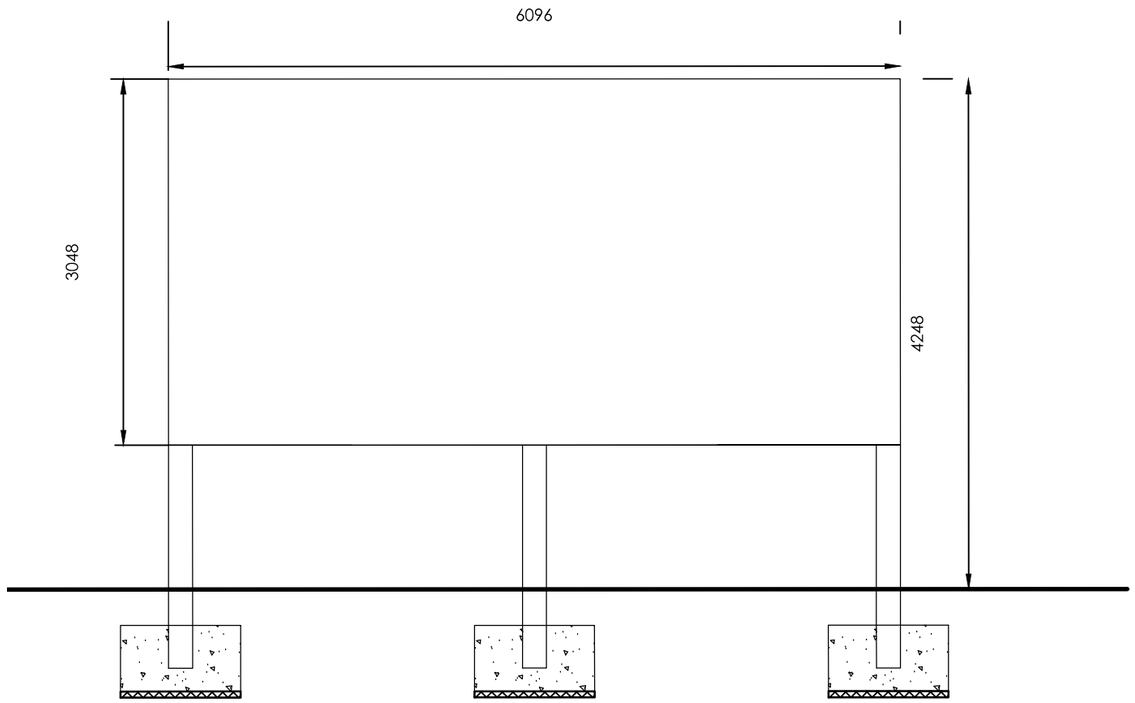

Proposed 48 Sheet Sign 1:50

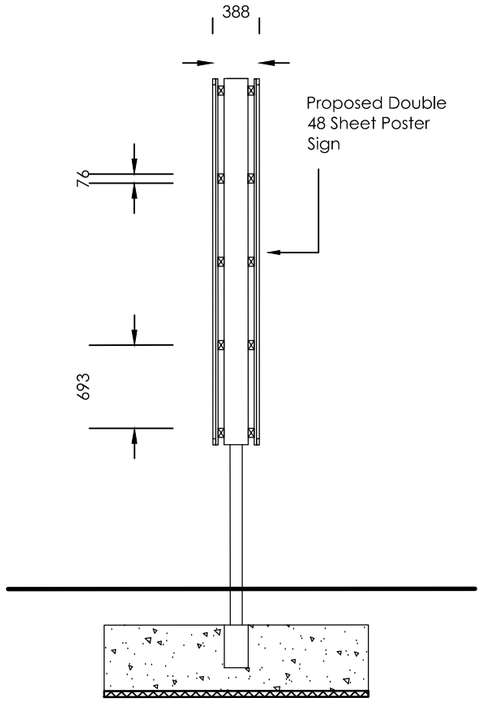

Image of similar sign

48 Sheet Poster Sign

SCALE 1 : 50 — 0m, 1m, 2m, 3m, 4m, 5m

SCALE 1 : 1 — 0m, 10mm, 20mm, 40mm, 60mm, 80mm, 100mm

CAD file reference

Rev	Date	Description	Rev By	Chk'd By
-	00-00-00	-----	XXX	XXX

Project Title	PROPOSED FOODSTORE FORMER JOB CENTRE PLUS SITE ST MARYS ROAD AIGBURTH LIVERPOOL				
Client	ALDI STORES LTD				
Status	PLANNING (ADVERTISEMENT)				
Scale	1:50		Drawing Size	A3	
Drawn By	JA	Checked By	SSR	Date	26/09/16
Drawing Title	48 SHEET SIGN DETAILS (SIGNAGE)				
Job-Dwg No	1364NES - 1008		Rev	-	

THE HARRIS PARTNERSHIP WAKEFIELD
2 St. Johns North, Wakefield, WF1 3QA
t. 01924 291 800 f. 01924 290 072

THE HARRIS PARTNERSHIP MANCHESTER
2nd Floor, Carvers Warehouse,
77 Dale Street, Manchester, M1 2HG
t. 0161 238 8555 f. 0161 244 5809

THE HARRIS PARTNERSHIP MILTON KEYNES
The Old Rectory, 79 High Street
Newport Pagnell, MK16 8AB
t. 01908 211 577 f. 01908 211 722

THE HARRIS PARTNERSHIP READING
101 London Road, Reading, RG1 5BY
t. 0118 950 7700 f. 0118 956 8642

THE HARRIS PARTNERSHIP
ARCHITECTS
www.harrispartnership.com

This drawing is copyright and may not be reproduced in whole or part without written authority. Do not scale off this drawing.