S|C|P

APPENDIX 1

Classified Turning Counts, Sefton

DATE: THURSDAY 26th JUNE 2014

LOCATION: QUEENS DRIVE / AIGBURTH VALE

ARM: QUEENS DRIVE (EAST)

TIME / CLASS	LEFT TO AIGBURTH VALE							STRAIGHT TO QUEENS DRIVE (WEST)							TOTAL MOVEMENT FROM ARM
	MOTOR CYCLE	CAR TAXI	LGV	OGV1	OGV2	BUS COACH	TOTAL	MOTOR CYCLE	CAR TAXI	LGV	OGV1	OGV2	BUS COACH	TOTAL	
7:00 - 7:15	0	26	3	1	0	0	30	0	44	1	0	0	0	45	75
7:15 - 7:30	0	27	1	2	0	1	31	0	68	8	0	0	0	76	107
7:30 - 7:45	0	21	3	1	0	1	26	0	82	8	0	0	2	92	118
7:45 - 8:00	0	29	3	1	0	1	34	0	83	3	1	0	0	87	121
HOURLY TOTAL	0	103	10	5	0	3	121	0	277	20	1	0	2	300	421
8:00 - 8:15	0	24	4	1	0	1	30	1	73	4	1	0	0	79	109
8:15 - 8:30	0	20	1	2	0	1	24	0	75	7	1	0	1	84	108
8:30 - 8:45	0	28	3	1	0	0	32	0	64	5	1	0	0	70	102
8:45 - 9:00	0	35	5	0	0	2	42	0	46	5	2	0	1	54	96
HOURLY TOTAL	0	107	13	4	0	4	128	1	258	21	5	0	2	287	415
PERIOD TOTAL	0	210	23	9	0	7	249	1	535	41	6	0	4	587	836
15:00 - 15:15	0	23	1	0	1	1	26	0	46	3	2	0	1	52	78
15:15 - 15:30	1	35	2	2	0	1	41	1	57	7	1	0	1	67	108
15:30 - 15:45	1	35	1	0	0	2	39	0	51	4	0	0	1	56	95
15:45 - 16:00	0	32	3	0	0	1	36	0	51	6	0	0	0	57	93
HOURLY TOTAL	2	125	7	2	1	5	142	1	205	20	3	0	3	232	374
16:00 - 16:15	0	35	0	1	0	1	37	0	69	6	1	0	0	76	113
16:15 - 16:30	0	30	1	1	0	0	32	0	77	4	0	0	1	82	114
16:30 - 16:45	1	31	2	0	0	1	35	0	70	5	0	0	0	75	110
16:45 - 17:00	0	34	6	0	0	1	41	0	78	10	0	0	0	88	129
HOURLY TOTAL	1	130	9	2	0	3	145	0	294	25	1	0	1	321	466
17:00 - 17:15	0	42	2	0	0	1	45	0	46	5	1	0	0	52	97
17:15 - 17:30	0	53	3	0	0	1	57	0	52	2	0	0	0	54	111
17:30 - 17:45	0	35	2	2	0	1	40	2	80	1	1	0	1	85	125
17:45 - 18:00	0	47	3	0	0	1	51	0	60	6	0	0	0	66	117
HOURLY TOTAL	0	177	10	2	0	4	193	2	238	14	2	0	1	257	450
PERIOD TOTAL	3	432	26	6	1	12	480	3	737	59	6	0	5	810	1290

Classified Turning Counts, Sefton

DATE: THURSDAY 26th JUNE 2014

LOCATION: QUEENS DRIVE / AIGBURTH VALE

ARM: AIGBURTH VALE

TIME / CLASS	LEFT TO QUEENS DRIVE (WEST)							RIGHT TO QUEENS DRIVE (EAST)							TOTAL MOVEMENT FROM ARM
	MOTOR CYCLE	CAR TAXI	LGV	OGV1	OGV2	BUS COACH	TOTAL	MOTOR CYCLE	CAR TAXI	LGV	OGV1	OGV2	BUS COACH	TOTAL	
7:00 - 7:15	0	3	0	0	0	0	3	0	20	3	0	0	1	24	27
7:15 - 7:30	0	1	0	0	0	0	1	0	32	0	0	0	2	34	35
7:30 - 7:45	0	0	0	0	0	0	0	0	51	2	0	0	0	53	53
7:45 - 8:00	0	2	0	0	0	0	2	0	54	1	0	0	1	56	58
HOURLY TOTAL	0	6	0	0	0	0	6	0	157	6	0	0	4	167	173
8:00 - 8:15	0	1	0	0	0	0	1	0	44	2	0	0	1	47	48
8:15 - 8:30	0	0	0	0	0	0	0	0	36	2	2	0	1	41	41
8:30 - 8:45	0	1	0	0	0	0	1	0	20	4	0	0	1	25	26
8:45 - 9:00	0	0	0	0	0	0	0	0	19	4	1	0	1	25	25
HOURLY TOTAL	0	2	0	0	0	0	2	0	119	12	3	0	4	138	140
PERIOD TOTAL	0	8	0	0	0	0	8	0	276	18	3	0	8	305	313
15:00 - 15:15	0	3	0	0	0	0	3	1	33	1	0	0	2	37	40
15:15 - 15:30	0	5	1	0	0	0	6	0	32	3	0	0	1	36	42
15:30 - 15:45	0	0	1	0	0	0	1	0	38	2	0	0	0	40	41
15:45 - 16:00	0	2	1	0	0	0	3	0	26	4	1	0	1	32	35
HOURLY TOTAL	0	10	3	0	0	0	13	1	129	10	1	0	4	145	158
16:00 - 16:15	0	0	0	0	0	0	0	0	33	1	1	0	1	36	36
16:15 - 16:30	0	4	0	0	0	0	4	0	36	3	0	0	1	40	44
16:30 - 16:45	0	9	0	0	0	0	9	0	34	3	1	0	0	38	47
16:45 - 17:00	0	1	1	0	0	0	2	1	35	4	2	0	1	43	45
HOURLY TOTAL	0	14	1	0	0	0	15	1	138	11	4	0	3	157	172
17:00 - 17:15	0	1	0	0	0	0	1	0	41	1	0	0	1	43	44
17:15 - 17:30	0	0	0	0	0	0	0	0	36	4	0	0	1	41	41
17:30 - 17:45	0	1	0	0	0	0	1	1	31	1	0	0	1	34	35
17:45 - 18:00	0	0	0	0	0	0	0	0	41	3	0	0	0	44	44
HOURLY TOTAL	0	2	0	0	0	0	2	1	149	9	0	0	3	162	164
PERIOD TOTAL	0	26	4	0	0	0	30	3	416	30	5	0	10	464	494

Classified Turning Counts, Sefton

DATE: THURSDAY 26th JUNE 2014

LOCATION: QUEENS DRIVE / AIGBURTH VALE

ARM: QUEENS DRIVE (WEST)

TIME / CLASS	STRAIGHT TO QUEENS DRIVE (EAST)							RIGHT TO AIGBURTH VALE							TOTAL MOVEMENT FROM ARM
	MOTOR CYCLE	CAR TAXI	LGV	OGV1	OGV2	BUS COACH	TOTAL	MOTOR CYCLE	CAR TAXI	LGV	OGV1	OGV2	BUS COACH	TOTAL	
7:00 - 7:15	0	47	3	0	0	0	50	0	0	0	0	0	0	0	50
7:15 - 7:30	0	60	2	0	0	0	62	0	0	0	0	0	0	0	62
7:30 - 7:45	0	86	6	0	0	2	94	0	0	0	0	0	0	0	94
7:45 - 8:00	0	84	2	1	0	0	87	0	3	0	0	0	0	3	90
HOURLY TOTAL	0	277	13	1	0	2	293	0	3	0	0	0	0	3	296
8:00 - 8:15	0	47	2	0	0	0	49	0	0	0	0	0	0	0	49
8:15 - 8:30	0	56	3	0	0	0	59	0	0	0	0	0	0	0	59
8:30 - 8:45	0	41	1	0	0	0	42	0	1	0	0	0	0	1	43
8:45 - 9:00	0	39	3	0	0	2	44	0	0	0	0	0	0	0	44
HOURLY TOTAL	0	183	9	0	0	2	194	0	1	0	0	0	0	1	195
PERIOD TOTAL	0	460	22	1	0	4	487	0	4	0	0	0	0	4	491
15:00 - 15:15	0	48	2	1	0	0	51	0	0	0	1	0	0	1	52
15:15 - 15:30	0	55	3	1	0	0	59	0	1	0	0	0	0	1	60
15:30 - 15:45	0	57	7	1	0	1	66	0	2	0	0	0	0	2	68
15:45 - 16:00	0	45	5	0	0	1	51	0	1	0	0	0	0	1	52
HOURLY TOTAL	0	205	17	3	0	2	227	0	4	0	1	0	0	5	232
16:00 - 16:15	0	58	3	1	0	1	63	0	1	0	0	0	0	1	64
16:15 - 16:30	0	46	4	0	0	1	51	0	1	0	0	0	0	1	52
16:30 - 16:45	0	67	8	1	0	0	76	0	8	0	0	0	0	8	84
16:45 - 17:00	0	41	3	0	0	0	44	0	4	0	0	0	0	4	48
HOURLY TOTAL	0	212	18	2	0	2	234	0	14	0	0	0	0	14	248
17:00 - 17:15	0	34	5	0	0	0	39	0	1	0	0	0	0	1	40
17:15 - 17:30	0	49	3	0	0	0	52	0	3	0	0	0	0	3	55
17:30 - 17:45	0	43	3	0	0	0	46	0	2	0	0	0	0	2	48
17:45 - 18:00	0	54	1	0	0	0	55	0	0	0	0	0	0	0	55
HOURLY TOTAL	0	180	12	0	0	0	192	0	6	0	0	0	0	6	198
PERIOD TOTAL	0	597	47	5	0	4	653	0	24	0	1	0	0	25	678

Classified Turning Counts, Sefton

DATE: THURSDAY 26th JUNE 2014

LOCATION: AIGBURTH VALE / PARK AVENUE

ARM: AIGBURTH VALE (NORTH)

TIME / CLASS	LEFT TO PARK AVENUE (EAST)							STRAIGHT TO AIGBURTH VALE (SOUTH)							RIGHT TO PARK AVENUE (WEST)							TOTAL MOVEMENT FROM ARM
	MOTOR CYCLE	CAR TAXI	LGV	OGV1	OGV2	BUS COACH	TOTAL	MOTOR CYCLE	CAR TAXI	LGV	OGV1	OGV2	BUS COACH	TOTAL	MOTOR CYCLE	CAR TAXI	LGV	OGV1	OGV2	BUS COACH	TOTAL	
7:00 - 7:15	0	2	0	0	0	0	2	0	25	3	1	0	0	29	0	0	0	0	0	0	0	31
7:15 - 7:30	0	2	0	0	0	0	2	0	26	1	2	0	1	30	0	0	0	0	0	0	0	32
7:30 - 7:45	0	0	0	0	0	0	0	0	20	3	1	0	1	25	0	0	0	0	0	0	0	25
7:45 - 8:00	0	0	0	0	0	0	0	0	32	3	1	0	1	37	0	0	0	0	0	0	0	37
HOURLY TOTAL	0	4	0	0	0	0	4	0	103	10	5	0	3	121	0	0	0	0	0	0	0	125
8:00 - 8:15	0	0	0	0	0	0	0	0	27	2	2	0	1	32	0	0	0	0	0	0	0	32
8:15 - 8:30	0	0	0	0	0	0	0	0	19	1	1	0	1	22	0	0	0	0	0	0	0	22
8:30 - 8:45	0	0	0	0	0	0	0	0	29	3	1	0	0	33	0	0	0	0	0	0	0	33
8:45 - 9:00	0	1	0	0	0	0	1	0	32	6	0	0	2	40	0	0	0	0	0	0	0	41
HOURLY TOTAL	0	1	0	0	0	0	1	0	107	12	4	0	4	127	0	0	0	0	0	0	0	128
PERIOD TOTAL	0	5	0	0	0	0	5	0	210	22	9	0	7	248	0	0	0	0	0	0	0	253
15:00 - 15:15	0	0	0	0	0	0	0	0	22	0	0	1	1	24	0	0	1	0	0	0	1	25
15:15 - 15:30	0	1	0	0	0	0	1	1	37	3	2	0	1	44	0	0	0	0	0	0	0	45
15:30 - 15:45	0	0	0	0	0	0	0	1	37	0	1	0	1	40	0	0	1	0	0	1	2	42
15:45 - 16:00	0	1	0	0	0	0	1	0	32	3	0	0	1	36	0	0	0	0	0	0	0	37
HOURLY TOTAL	0	2	0	0	0	0	2	2	128	6	3	1	4	144	0	0	2	0	0	1	3	149
16:00 - 16:15	0	1	0	0	0	0	1	0	35	0	1	0	1	37	0	0	0	0	0	0	0	38
16:15 - 16:30	0	1	0	0	0	0	1	0	27	2	1	0	0	30	0	0	0	0	0	0	0	31
16:30 - 16:45	0	6	0	0	0	0	6	1	33	1	0	0	1	36	0	0	0	0	0	0	0	42
16:45 - 17:00	0	5	0	0	0	0	5	0	36	6	0	0	1	43	0	0	0	0	0	0	0	48
HOURLY TOTAL	0	13	0	0	0	0	13	1	131	9	2	0	3	146	0	0	0	0	0	0	0	159
17:00 - 17:15	0	3	0	0	0	0	3	0	39	2	0	0	1	42	0	0	0	0	0	0	0	45
17:15 - 17:30	0	7	0	0	0	0	7	0	46	3	0	0	1	50	0	0	0	0	0	0	0	57
17:30 - 17:45	0	2	0	0	0	0	2	0	34	3	2	0	1	40	0	0	0	0	0	0	0	42
17:45 - 18:00	0	2	0	0	0	0	2	0	46	3	0	0	2	51	0	0	0	0	0	0	0	53
HOURLY TOTAL	0	14	0	0	0	0	14	0	165	11	2	0	5	183	0	0	0	0	0	0	0	197
PERIOD TOTAL	0	29	0	0	0	0	29	3	424	26	7	1	12	473	0	0	2	0	0	1	3	505

Classified Turning Counts, Sefton

DATE: THURSDAY 26th JUNE 2014

LOCATION: AIGBURTH VALE / PARK AVENUE

ARM: PARK AVENUE (EAST)

TIME / CLASS	LEFT TO AIGBURTH VALE (SOUTH)							STRAIGHT TO PARK AVENUE (WEST)							RIGHT TO AIGBURTH VALE (NORTH)							TOTAL MOVEMENT FROM ARM
	MOTOR CYCLE	CAR TAXI	LGV	OGV1	OGV2	BUS COACH	TOTAL	MOTOR CYCLE	CAR TAXI	LGV	OGV1	OGV2	BUS COACH	TOTAL	MOTOR CYCLE	CAR TAXI	LGV	OGV1	OGV2	BUS COACH	TOTAL	
7:00 - 7:15	0	1	0	0	0	0	1	0	0	0	0	0	0	0	0	2	0	0	0	0	2	3
7:15 - 7:30	0	8	0	0	0	0	8	0	7	0	0	0	0	7	0	5	0	0	0	0	5	20
7:30 - 7:45	0	5	0	0	0	0	5	0	16	1	0	0	0	17	0	5	1	0	0	0	6	28
7:45 - 8:00	0	5	0	0	0	1	6	0	17	1	0	0	0	18	0	4	0	0	0	0	4	28
HOURLY TOTAL	0	19	0	0	0	1	20	0	40	2	0	0	0	42	0	16	1	0	0	0	17	79
8:00 - 8:15	0	7	0	0	0	0	7	0	12	1	1	0	0	14	0	5	0	0	0	0	5	26
8:15 - 8:30	0	6	0	0	0	0	6	0	11	0	0	0	0	11	0	4	0	0	0	0	4	21
8:30 - 8:45	0	5	0	0	0	0	5	0	6	1	0	0	0	7	0	2	0	0	0	0	2	14
8:45 - 9:00	0	2	1	0	0	1	4	0	3	0	0	0	0	3	0	1	0	0	0	0	1	8
HOURLY TOTAL	0	20	1	0	0	1	22	0	32	2	1	0	0	35	0	12	0	0	0	0	12	69
PERIOD TOTAL	0	39	1	0	0	2	42	0	72	4	1	0	0	77	0	28	1	0	0	0	29	148
15:00 - 15:15	0	5	0	1	0	0	6	0	3	0	0	0	0	3	0	2	2	0	0	0	4	13
15:15 - 15:30	0	5	1	0	0	1	7	0	6	0	0	0	0	6	0	1	1	0	0	0	2	15
15:30 - 15:45	0	8	0	0	0	0	8	0	3	0	0	0	1	4	0	4	1	0	0	0	5	17
15:45 - 16:00	0	1	0	0	0	0	1	0	5	1	0	0	0	6	0	2	0	0	0	0	2	9
HOURLY TOTAL	0	19	1	1	0	1	22	0	17	1	0	0	1	19	0	9	4	0	0	0	13	54
16:00 - 16:15	0	2	0	0	0	0	2	0	5	0	0	0	0	5	0	2	0	0	0	0	2	9
16:15 - 16:30	0	2	1	0	0	1	4	0	3	1	0	0	0	4	0	2	0	0	0	0	2	10
16:30 - 16:45	0	2	0	0	0	0	2	0	2	1	0	0	0	3	0	3	0	0	0	0	3	8
16:45 - 17:00	0	7	0	0	0	0	7	0	3	0	0	0	0	3	0	2	0	0	0	0	2	12
HOURLY TOTAL	0	13	1	0	0	1	15	0	13	2	0	0	0	15	0	9	0	0	0	0	9	39
17:00 - 17:15	0	6	0	0	0	0	6	0	5	0	0	0	0	5	0	4	0	0	0	0	4	15
17:15 - 17:30	0	5	0	0	0	0	5	0	6	0	0	0	0	6	0	4	0	0	0	0	4	15
17:30 - 17:45	0	2	0	0	0	0	2	0	4	0	0	0	0	4	0	3	0	0	0	0	3	9
17:45 - 18:00	0	11	1	0	0	0	12	0	1	0	0	0	0	1	0	3	0	0	0	0	3	16
HOURLY TOTAL	0	24	1	0	0	0	25	0	16	0	0	0	0	16	0	14	0	0	0	0	14	55
PERIOD TOTAL	0	56	3	1	0	2	62	0	46	3	0	0	1	50	0	32	4	0	0	0	36	148

Classified Turning Counts, Sefton

DATE: THURSDAY 26th JUNE 2014

LOCATION: AIGBURTH VALE / PARK AVENUE

ARM: AIGBURTH VALE (SOUTH)

TIME / CLASS	LEFT TO PARK AVENUE (WEST)							STRAIGHT TO AIGBURTH VALE (NORTH)							RIGHT TO PARK AVENUE (EAST)							TOTAL MOVEMENT FROM ARM
	MOTOR CYCLE	CAR TAXI	LGV	OGV1	OGV2	BUS COACH	TOTAL	MOTOR CYCLE	CAR TAXI	LGV	OGV1	OGV2	BUS COACH	TOTAL	MOTOR CYCLE	CAR TAXI	LGV	OGV1	OGV2	BUS COACH	TOTAL	
7:00 - 7:15	0	0	0	0	0	0	0	0	20	4	0	0	1	25	0	5	0	1	0	0	6	31
7:15 - 7:30	0	4	0	0	0	0	4	0	31	0	0	0	1	32	0	4	0	0	0	0	4	40
7:30 - 7:45	0	19	0	0	0	0	19	0	43	1	0	0	1	45	0	2	1	0	0	1	4	68
7:45 - 8:00	0	23	0	0	0	0	23	0	49	1	0	0	0	50	0	5	1	0	0	0	6	79
HOURLY TOTAL	0	46	0	0	0	0	46	0	143	6	0	0	3	152	0	16	2	1	0	1	20	218
8:00 - 8:15	0	5	0	1	0	0	6	0	39	3	0	0	2	44	0	2	0	0	0	0	2	52
8:15 - 8:30	0	4	0	0	0	0	4	0	32	2	2	0	1	37	0	5	0	0	0	0	5	46
8:30 - 8:45	0	4	0	0	0	0	4	0	20	3	0	0	1	24	0	3	0	0	0	1	4	32
8:45 - 9:00	0	0	0	0	0	0	0	0	17	4	1	0	1	23	0	1	0	0	0	0	1	24
HOURLY TOTAL	0	13	0	1	0	0	14	0	108	12	3	0	5	128	0	11	0	0	0	1	12	154
PERIOD TOTAL	0	59	0	1	0	0	60	0	251	18	3	0	8	280	0	27	2	1	0	2	32	372
15:00 - 15:15	0	0	0	0	0	0	0	0	34	0	0	0	2	36	0	2	1	0	0	0	3	39
15:15 - 15:30	0	0	0	0	0	0	0	0	34	3	0	0	1	38	0	0	0	0	0	0	0	38
15:30 - 15:45	0	0	0	0	0	0	0	0	33	2	0	0	0	35	0	1	0	0	0	0	1	36
15:45 - 16:00	0	0	0	0	0	0	0	0	26	3	1	0	1	31	0	4	0	0	0	0	4	35
HOURLY TOTAL	0	0	0	0	0	0	0	0	127	8	1	0	4	140	0	7	1	0	0	0	8	148
16:00 - 16:15	0	2	0	0	0	0	2	0	34	3	1	0	1	39	0	1	0	0	0	0	1	42
16:15 - 16:30	0	4	0	0	0	0	4	0	31	2	0	0	1	34	0	5	0	0	0	1	6	44
16:30 - 16:45	0	4	1	0	0	0	5	0	46	2	1	0	1	50	0	2	0	0	0	0	2	57
16:45 - 17:00	0	1	0	0	0	0	1	1	32	5	2	0	0	40	0	2	0	0	0	0	2	43
HOURLY TOTAL	0	11	1	0	0	0	12	1	143	12	4	0	3	163	0	10	0	0	0	1	11	186
17:00 - 17:15	0	1	0	0	0	0	1	0	38	2	0	0	1	41	0	7	0	0	0	0	7	49
17:15 - 17:30	0	1	0	0	0	0	1	0	30	4	0	0	1	35	0	3	0	0	0	1	4	40
17:30 - 17:45	0	2	0	0	0	0	2	1	33	1	0	0	1	36	0	4	0	0	0	0	4	42
17:45 - 18:00	0	1	0	0	0	0	1	0	32	2	0	0	0	34	0	2	0	0	0	0	2	37
HOURLY TOTAL	0	5	0	0	0	0	5	1	133	9	0	0	3	146	0	16	0	0	0	1	17	168
PERIOD TOTAL	0	16	1	0	0	0	17	2	403	29	5	0	10	449	0	33	1	0	0	2	36	502

Classified Turning Counts, Sefton

DATE: THURSDAY 26th JUNE 2014

LOCATION: AIGBURTH VALE / PARK AVENUE

ARM: PARK AVENUE (WEST)

TIME / CLASS	LEFT TO AIGBURTH VALE (NORTH)							STRAIGHT TO PARK AVENUE (EAST)							RIGHT TO AIGBURTH VALE (SOUTH)							TOTAL MOVEMENT FROM ARM
	MOTOR CYCLE	CAR TAXI	LGV	OGV1	OGV2	BUS COACH	TOTAL	MOTOR CYCLE	CAR TAXI	LGV	OGV1	OGV2	BUS COACH	TOTAL	MOTOR CYCLE	CAR TAXI	LGV	OGV1	OGV2	BUS COACH	TOTAL	
7:00 - 7:15	0	0	0	0	0	0	0	0	1	1	0	0	0	2	0	0	0	0	0	0	0	2
7:15 - 7:30	0	0	0	0	0	0	0	0	0	0	0	0	0	0	0	0	0	0	0	0	0	0
7:30 - 7:45	0	0	0	0	0	0	0	0	2	0	0	0	0	2	0	1	0	0	0	0	1	3
7:45 - 8:00	0	1	0	0	0	0	1	0	4	1	0	0	0	5	0	2	0	0	0	0	2	8
HOURLY TOTAL	0	1	0	0	0	0	1	0	7	2	0	0	0	9	0	3	0	0	0	0	3	13
8:00 - 8:15	0	1	0	0	0	0	1	0	8	0	0	0	0	8	0	0	0	0	0	0	0	9
8:15 - 8:30	0	0	0	0	0	0	0	0	2	1	0	0	0	3	0	0	0	0	0	0	0	3
8:30 - 8:45	0	0	0	0	0	0	0	0	4	0	0	0	0	4	0	2	0	0	0	0	2	6
8:45 - 9:00	0	0	0	0	0	0	0	0	4	0	0	0	0	4	0	0	0	0	0	0	0	4
HOURLY TOTAL	0	1	0	0	0	0	1	0	18	1	0	0	0	19	0	2	0	0	0	0	2	22
PERIOD TOTAL	0	2	0	0	0	0	2	0	25	3	0	0	0	28	0	5	0	0	0	0	5	35
15:00 - 15:15	0	0	0	0	0	0	0	0	6	1	0	0	0	7	0	3	0	0	0	0	3	10
15:15 - 15:30	0	1	0	0	0	0	1	0	3	1	0	0	0	4	0	1	0	0	0	0	1	6
15:30 - 15:45	0	1	1	0	0	0	2	0	1	1	0	0	0	2	0	2	0	0	0	0	2	6
15:45 - 16:00	0	0	1	0	0	0	1	0	1	0	0	0	0	1	0	0	1	0	0	0	1	3
HOURLY TOTAL	0	2	2	0	0	0	4	0	11	3	0	0	0	14	0	6	1	0	0	0	7	25
16:00 - 16:15	0	0	0	0	0	0	0	0	0	0	0	0	0	0	0	2	0	0	0	0	2	2
16:15 - 16:30	0	0	0	0	0	0	0	0	2	0	0	0	0	2	0	1	0	0	0	0	1	3
16:30 - 16:45	0	0	0	0	0	0	0	0	3	0	0	0	0	3	0	4	0	0	0	0	4	7
16:45 - 17:00	0	0	0	0	0	0	0	0	7	0	0	0	0	7	0	1	0	0	0	0	1	8
HOURLY TOTAL	0	0	0	0	0	0	0	0	12	0	0	0	0	12	0	8	0	0	0	0	8	20
17:00 - 17:15	0	0	0	0	0	0	0	0	3	1	0	0	0	4	0	1	0	0	0	0	1	5
17:15 - 17:30	0	0	0	0	0	0	0	0	1	0	0	0	0	1	0	2	0	0	0	0	2	3
17:30 - 17:45	0	0	0	0	0	0	0	1	1	0	0	0	0	2	0	2	0	0	0	0	2	4
17:45 - 18:00	0	1	0	0	0	0	1	1	1	0	0	0	0	2	0	1	1	0	0	0	2	5
HOURLY TOTAL	0	1	0	0	0	0	1	2	6	1	0	0	0	9	0	6	1	0	0	0	7	17
PERIOD TOTAL	0	3	2	0	0	0	5	2	29	4	0	0	0	35	0	20	2	0	0	0	22	62

Classified Turning Counts, Sefton

DATE: THURSDAY 26th JUNE 2014

LOCATION: MOSSLEY HILL DRIVE / QUEENS DRIVE

ARM: MOSSLEY HILL DRIVE (NORTH)

TIME / CLASS	LEFT TO QUEENS DRIVE							STRAIGHT TO PARK AVENUE							RIGHT TO MOSSLEY HILL DRIVE (SOUTH)							TOTAL MOVEMENT FROM ARM
	MOTOR CYCLE	CAR TAXI	LGV	OGV1	OGV2	BUS COACH	TOTAL	MOTOR CYCLE	CAR TAXI	LGV	OGV1	OGV2	BUS COACH	TOTAL	MOTOR CYCLE	CAR TAXI	LGV	OGV1	OGV2	BUS COACH	TOTAL	
7:30 - 7:45	0	0	0	0	0	0	0	0	0	0	0	0	0	0	0	0	0	0	0	0	0	0
7:45 - 8:00	0	0	0	0	0	0	0	0	0	0	0	0	0	0	0	0	0	0	0	0	0	0
8:00 - 8:15	0	1	0	0	0	0	1	0	0	0	0	0	0	0	0	0	0	0	0	0	0	1
8:15 - 8:30	0	0	0	0	0	0	0	0	1	0	0	0	0	1	0	0	0	0	0	0	0	1
HOURLY TOTAL	0	1	0	0	0	0	1	0	1	0	0	0	0	1	0	0	0	0	0	0	0	2
8:30 - 8:45	0	0	0	0	0	0	0	0	0	0	0	0	0	0	0	0	0	0	0	0	0	0
8:45 - 9:00	0	2	0	0	0	0	2	0	0	0	0	0	0	0	0	0	0	0	0	0	0	2
9:00 - 9:15	0	1	0	0	0	0	1	0	0	0	0	0	0	0	0	1	0	0	0	0	1	2
9:15 - 9:30	0	2	0	0	0	0	2	0	0	0	0	0	0	0	0	2	0	0	0	0	2	4
HOURLY TOTAL	0	5	0	0	0	0	5	0	0	0	0	0	0	0	0	3	0	0	0	0	3	8
PERIOD TOTAL	0	6	0	0	0	0	6	0	1	0	0	0	0	1	0	3	0	0	0	0	3	10
15:00 - 15:15	0	4	1	0	0	0	5	0	0	0	0	0	0	0	0	0	0	0	0	0	0	5
15:15 - 15:30	0	1	0	0	0	0	1	0	0	1	0	0	0	1	0	1	0	0	0	0	1	3
15:30 - 15:45	0	1	0	0	0	0	1	0	1	1	0	0	0	2	0	0	0	0	0	0	0	3
15:45 - 16:00	0	2	0	0	0	0	2	0	0	0	0	0	0	0	0	3	0	0	0	0	3	5
HOURLY TOTAL	0	8	1	0	0	0	9	0	1	2	0	0	0	3	0	4	0	0	0	0	4	16
16:00 - 16:15	0	1	0	0	0	0	1	0	1	0	0	0	0	1	0	0	0	0	0	0	0	2
16:15 - 16:30	0	2	1	0	0	0	3	0	0	0	0	0	0	0	0	0	0	0	0	0	0	3
16:30 - 16:45	0	2	0	0	0	0	2	0	0	0	0	0	0	0	0	1	0	0	0	0	1	3
16:45 - 17:00	0	1	0	0	0	0	1	0	0	0	0	0	0	0	0	0	0	0	0	0	0	1
HOURLY TOTAL	0	6	1	0	0	0	7	0	1	0	0	0	0	1	0	1	0	0	0	0	1	9
17:00 - 17:15	1	1	0	0	0	0	2	0	0	0	0	0	0	0	0	0	0	0	0	0	0	2
17:15 - 17:30	0	4	0	0	0	0	4	0	0	0	0	0	0	0	0	0	0	0	0	0	0	4
17:30 - 17:45	0	3	1	0	0	0	4	0	0	0	0	0	0	0	0	0	0	0	0	0	0	4
17:45 - 18:00	0	3	0	0	0	0	3	0	1	0	0	0	0	1	0	0	0	0	0	0	0	4
HOURLY TOTAL	1	11	1	0	0	0	13	0	1	0	0	0	0	1	0	0	0	0	0	0	0	14
PERIOD TOTAL	1	25	3	0	0	0	29	0	3	2	0	0	0	5	0	5	0	0	0	0	5	39

Classified Turning Counts, Sefton

DATE: THURSDAY 26th JUNE 2014

LOCATION: MOSSLEY HILL DRIVE / QUEENS DRIVE

ARM: QUEENS DRIVE

TIME / CLASS	LEFT TO PARK AVENUE							STRAIGHT TO MOSSLEY HILL DRIVE (SOUTH)							RIGHT TO MOSSLEY HILL DRIVE (NORTH)							U-TURN TO QUEENS DRIVE							TOTAL MOVEMENT FROM ARM
	MOTOR CYCLE	CAR TAXI	LGV	OGV1	OGV2	BUS COACH	TOTAL	MOTOR CYCLE	CAR TAXI	LGV	OGV1	OGV2	BUS COACH	TOTAL	MOTOR CYCLE	CAR TAXI	LGV	OGV1	OGV2	BUS COACH	TOTAL	MOTOR CYCLE	CAR TAXI	LGV	OGV1	OGV2	BUS COACH	TOTAL	
7:30 - 7:45	0	0	0	0	0	0	0	0	41	1	0	0	0	42	0	1	0	0	0	0	1	0	0	0	0	0	0	0	43
7:45 - 8:00	0	0	0	0	0	0	0	0	65	7	0	0	0	72	0	1	0	0	0	0	1	0	2	0	0	0	0	2	75
8:00 - 8:15	0	0	0	0	0	0	0	0	73	7	0	0	0	80	0	0	0	0	0	0	0	0	11	0	0	0	2	13	93
8:15 - 8:30	0	0	0	0	0	0	0	0	65	4	1	0	0	70	0	0	0	0	0	0	0	0	23	0	0	0	0	23	93
HOURLY TOTAL	0	0	0	0	0	0	0	0	244	19	1	0	0	264	0	2	0	0	0	0	2	0	36	0	0	0	2	38	304
8:30 - 8:45	0	0	0	0	0	0	0	1	70	4	1	0	0	76	0	0	0	0	0	0	0	0	3	0	0	0	0	3	79
8:45 - 9:00	0	0	0	0	0	0	0	0	75	7	1	0	1	84	0	0	0	0	0	0	0	0	0	0	0	0	0	0	84
9:00 - 9:15	0	0	0	0	0	0	0	0	55	5	1	0	0	61	0	5	0	0	0	0	5	0	3	0	0	0	0	3	69
9:15 - 9:30	0	0	0	0	0	0	0	0	44	8	2	0	0	54	0	0	0	0	0	0	0	0	0	0	0	0	1	1	55
HOURLY TOTAL	0	0	0	0	0	0	0	1	244	24	5	0	1	275	0	5	0	0	0	0	5	0	6	0	0	0	1	7	287
PERIOD TOTAL	0	0	0	0	0	0	0	1	488	43	6	0	1	539	0	7	0	0	0	0	7	0	42	0	0	0	3	45	591
15:00 - 15:15	0	1	0	0	0	0	1	0	44	5	2	0	1	52	0	2	0	0	0	0	2	0	0	0	0	0	0	0	55
15:15 - 15:30	0	1	0	0	0	0	1	1	57	5	1	0	1	65	0	2	1	0	0	0	3	0	3	0	0	0	0	3	72
15:30 - 15:45	0	0	1	0	0	0	1	0	48	4	0	0	1	53	0	2	0	0	0	0	2	0	1	0	0	0	0	1	57
15:45 - 16:00	0	0	1	0	0	0	1	0	49	6	0	0	0	55	0	0	0	0	0	0	0	0	4	0	0	0	0	4	60
HOURLY TOTAL	0	2	2	0	0	0	4	1	198	20	3	0	3	225	0	6	1	0	0	0	7	0	8	0	0	0	0	8	244
16:00 - 16:15	0	0	0	0	0	0	0	0	58	6	1	0	0	65	0	1	0	0	0	0	1	0	9	0	0	0	0	9	75
16:15 - 16:30	0	0	0	0	0	0	0	0	59	4	0	0	0	63	0	1	0	0	0	0	1	0	19	0	0	0	1	20	84
16:30 - 16:45	0	3	0	0	0	0	3	0	66	3	1	0	0	70	0	0	0	0	0	0	0	0	8	1	0	0	0	9	82
16:45 - 17:00	0	2	0	0	0	0	2	0	76	11	0	0	0	87	0	1	0	0	0	0	1	0	1	0	0	0	0	1	91
HOURLY TOTAL	0	5	0	0	0	0	5	0	259	24	2	0	0	285	0	3	0	0	0	0	3	0	37	1	0	0	1	39	332
17:00 - 17:15	0	1	0	0	0	0	1	0	47	5	0	0	0	52	0	0	0	0	0	0	0	0	0	0	0	0	0	0	53
17:15 - 17:30	0	0	0	0	0	0	0	0	48	2	0	0	0	50	0	3	0	0	0	0	3	0	2	0	0	0	0	2	55
17:30 - 17:45	1	0	0	0	0	0	1	1	77	1	1	0	1	81	0	5	0	0	0	0	5	0	0	0	0	0	0	0	87
17:45 - 18:00	1	0	0	0	0	0	1	0	55	5	0	0	0	60	0	4	0	0	0	0	4	0	1	0	0	0	0	1	66
HOURLY TOTAL	2	1	0	0	0	0	3	1	227	13	1	0	1	243	0	12	0	0	0	0	12	0	3	0	0	0	0	3	261
PERIOD TOTAL	2	8	2	0	0	0	12	2	684	57	6	0	4	753	0	21	1	0	0	0	22	0	48	1	0	0	1	50	837

Classified Turning Counts, Sefton

DATE: THURSDAY 26th JUNE 2014

LOCATION: MOSSLEY HILL DRIVE / QUEENS DRIVE

ARM: PARK AVENUE

TIME / CLASS	LEFT TO MOSSLEY HILL DRIVE (SOUTH)							STRAIGHT TO MOSSLEY HILL DRIVE (NORTH)							RIGHT TO QUEENS DRIVE							TOTAL MOVEMENT FROM ARM
	MOTOR CYCLE	CAR TAXI	LGV	OGV1	OGV2	BUS COACH	TOTAL	MOTOR CYCLE	CAR TAXI	LGV	OGV1	OGV2	BUS COACH	TOTAL	MOTOR CYCLE	CAR TAXI	LGV	OGV1	OGV2	BUS COACH	TOTAL	
7:30 - 7:45	0	0	0	0	0	0	0	0	0	0	0	0	0	0	0	0	0	0	0	0	0	0
7:45 - 8:00	0	9	0	0	0	0	9	0	0	0	0	0	0	0	0	0	0	0	0	0	0	9
8:00 - 8:15	0	18	1	0	0	0	19	0	0	0	0	0	0	0	0	11	0	0	0	0	11	30
8:15 - 8:30	0	22	1	0	0	0	23	0	0	0	0	0	0	0	0	22	0	0	0	0	22	45
HOURLY TOTAL	0	49	2	0	0	0	51	0	0	0	0	0	0	0	0	33	0	0	0	0	33	84
8:30 - 8:45	0	19	0	1	0	0	20	0	1	0	0	0	0	1	0	1	0	0	0	0	1	22
8:45 - 9:00	0	14	0	1	0	0	15	0	0	0	0	0	0	0	0	0	0	0	0	0	0	15
9:00 - 9:15	0	8	0	0	0	0	8	0	3	0	0	0	0	3	0	0	0	0	0	0	0	11
9:15 - 9:30	0	3	1	0	0	0	4	0	0	0	0	0	0	0	0	0	0	0	0	0	0	4
HOURLY TOTAL	0	44	1	2	0	0	47	0	4	0	0	0	0	4	0	1	0	0	0	0	1	52
PERIOD TOTAL	0	93	3	2	0	0	98	0	4	0	0	0	0	4	0	34	0	0	0	0	34	136
15:00 - 15:15	0	3	0	0	0	0	3	0	1	1	0	0	0	2	0	0	0	0	0	0	0	5
15:15 - 15:30	0	3	0	0	0	0	3	0	0	0	0	0	0	0	0	1	0	2	0	0	3	6
15:30 - 15:45	0	5	2	0	0	1	8	0	0	0	0	0	0	0	0	0	0	0	0	1	1	9
15:45 - 16:00	0	4	1	0	0	0	5	0	0	0	0	0	0	0	0	1	0	0	0	0	1	6
HOURLY TOTAL	0	15	3	0	0	1	19	0	1	1	0	0	0	2	0	2	0	2	0	1	5	26
16:00 - 16:15	0	6	0	0	0	0	6	0	0	0	0	0	0	0	0	3	0	0	0	0	3	9
16:15 - 16:30	0	2	1	0	0	0	3	0	0	0	0	0	0	0	0	4	0	0	0	0	4	7
16:30 - 16:45	0	2	2	0	0	0	4	0	1	0	0	0	0	1	0	5	0	0	0	0	5	10
16:45 - 17:00	0	4	0	0	0	0	4	0	0	0	0	0	0	0	0	0	0	0	0	0	0	4
HOURLY TOTAL	0	14	3	0	0	0	17	0	1	0	0	0	0	1	0	12	0	0	0	0	12	30
17:00 - 17:15	0	5	0	0	0	0	5	0	0	0	0	0	0	0	0	1	0	0	0	0	1	6
17:15 - 17:30	0	6	0	0	0	0	6	0	1	0	0	0	0	1	0	0	0	0	0	0	0	7
17:30 - 17:45	0	5	0	0	0	0	5	0	1	0	0	0	0	1	0	0	0	0	0	0	0	6
17:45 - 18:00	0	2	0	0	0	0	2	0	0	0	0	0	0	0	0	0	0	0	0	0	0	2
HOURLY TOTAL	0	18	0	0	0	0	18	0	2	0	0	0	0	2	0	1	0	0	0	0	1	21
PERIOD TOTAL	0	47	6	0	0	1	54	0	4	1	0	0	0	5	0	15	0	2	0	1	18	77

Classified Turning Counts, Sefton

DATE: THURSDAY 26th JUNE 2014

LOCATION: MOSSLEY HILL DRIVE / QUEENS DRIVE

ARM: MOSSLEY HILL DRIVE (SOUTH)

TIME / CLASS	LEFT TO MOSSLEY HILL DRIVE (NORTH)							STRAIGHT TO QUEENS DRIVE							RIGHT TO PARK AVENUE							TOTAL MOVEMENT FROM ARM
	MOTOR CYCLE	CAR TAXI	LGV	OGV1	OGV2	BUS COACH	TOTAL	MOTOR CYCLE	CAR TAXI	LGV	OGV1	OGV2	BUS COACH	TOTAL	MOTOR CYCLE	CAR TAXI	LGV	OGV1	OGV2	BUS COACH	TOTAL	
7:30 - 7:45	0	0	0	0	0	0	0	0	48	3	0	0	0	51	0	1	0	0	0	0	1	52
7:45 - 8:00	0	0	0	0	0	0	0	0	59	0	0	0	0	59	0	0	1	0	0	0	1	60
8:00 - 8:15	0	0	0	0	0	0	0	0	59	6	0	0	0	65	0	2	0	0	0	0	2	67
8:15 - 8:30	0	0	0	0	0	0	0	0	44	2	0	0	0	46	0	6	1	0	0	0	7	53
HOURLY TOTAL	0	0	0	0	0	0	0	0	210	11	0	0	0	221	0	9	2	0	0	0	11	232
8:30 - 8:45	0	0	0	0	0	0	0	0	46	1	0	0	0	47	0	8	0	0	0	0	8	55
8:45 - 9:00	0	2	0	0	0	0	2	0	52	4	0	0	0	56	0	2	0	0	0	0	2	60
9:00 - 9:15	0	0	0	0	0	0	0	0	39	1	0	0	0	40	0	6	0	0	0	0	6	46
9:15 - 9:30	0	1	0	0	0	0	1	0	37	3	0	0	1	41	0	5	0	0	0	0	5	47
HOURLY TOTAL	0	3	0	0	0	0	3	0	174	9	0	0	1	184	0	21	0	0	0	0	21	208
PERIOD TOTAL	0	3	0	0	0	0	3	0	384	20	0	0	1	405	0	30	2	0	0	0	32	440
15:00 - 15:15	0	1	0	0	0	0	1	0	44	3	0	0	0	47	0	7	1	0	0	0	8	56
15:15 - 15:30	0	2	0	0	0	0	2	0	53	3	0	0	0	56	0	4	1	0	0	0	5	63
15:30 - 15:45	0	0	0	0	0	0	0	0	57	6	1	0	1	65	0	2	0	0	0	0	2	67
15:45 - 16:00	0	1	0	0	0	0	1	0	38	5	0	0	0	43	0	1	1	0	0	0	2	46
HOURLY TOTAL	0	4	0	0	0	0	4	0	192	17	1	0	1	211	0	14	3	0	0	0	17	232
16:00 - 16:15	0	0	0	0	0	0	0	0	45	3	1	0	1	50	0	1	0	0	0	0	1	51
16:15 - 16:30	0	0	0	0	0	0	0	0	41	4	0	0	0	45	0	3	0	0	0	0	3	48
16:30 - 16:45	0	0	0	0	0	0	0	0	40	8	1	0	0	49	0	3	0	0	0	0	3	52
16:45 - 17:00	0	0	0	0	0	0	0	0	43	4	0	0	0	47	0	7	0	0	0	0	7	54
HOURLY TOTAL	0	0	0	0	0	0	0	0	169	19	2	0	1	191	0	14	0	0	0	0	14	205
17:00 - 17:15	0	0	0	0	0	0	0	0	34	3	0	0	0	37	0	3	1	0	0	0	4	41
17:15 - 17:30	0	0	0	0	0	0	0	0	45	3	0	0	0	48	0	3	0	0	0	0	3	51
17:30 - 17:45	0	0	0	0	0	0	0	0	41	1	0	0	0	42	0	2	0	0	0	0	2	44
17:45 - 18:00	0	0	0	0	0	0	0	0	51	1	0	0	0	52	0	3	0	0	0	0	3	55
HOURLY TOTAL	0	0	0	0	0	0	0	0	171	8	0	0	0	179	0	11	1	0	0	0	12	191
PERIOD TOTAL	0	4	0	0	0	0	4	0	532	44	3	0	2	581	0	39	4	0	0	0	43	628

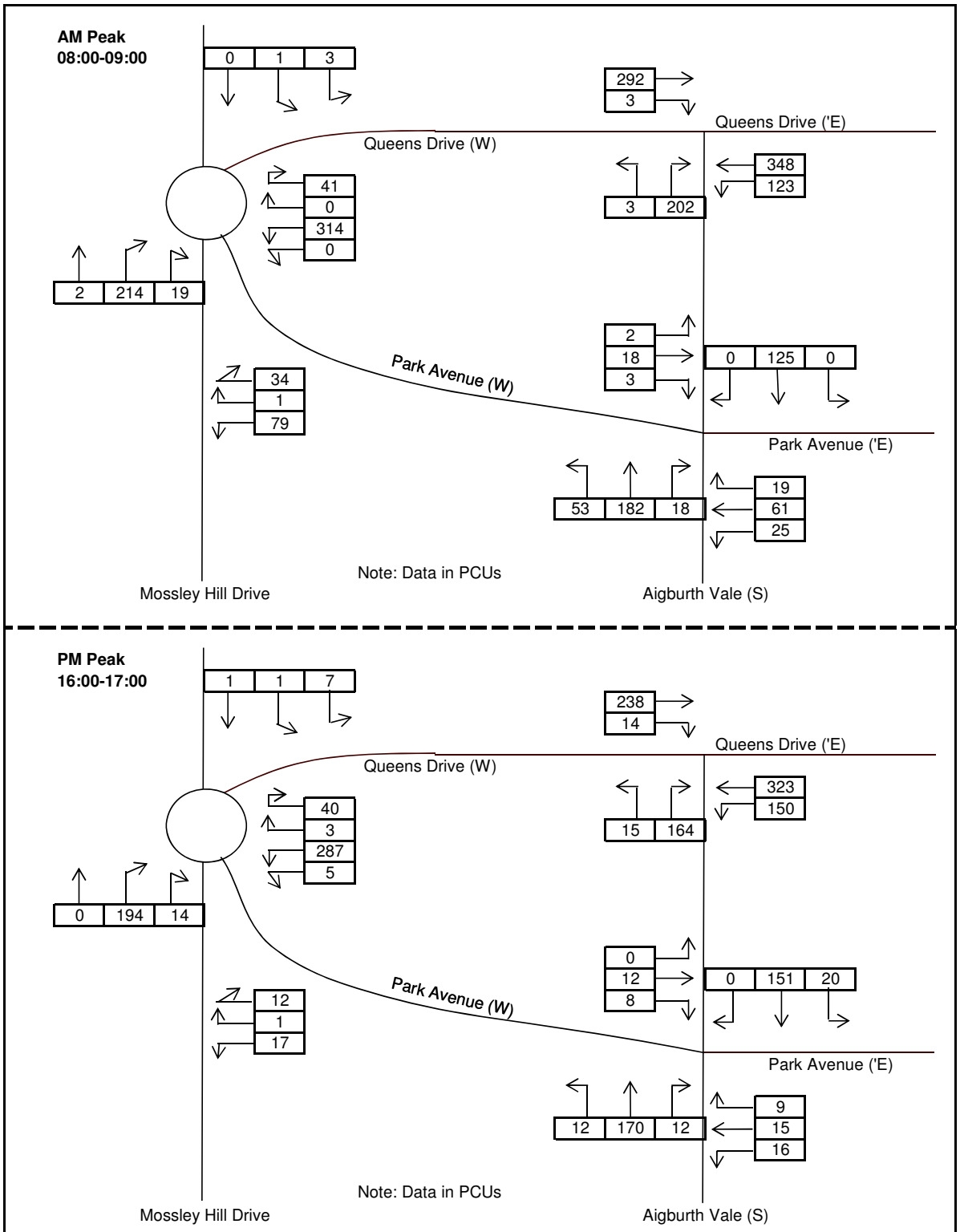

Observed Peak Hour Flows (PCU) - June 2014

Proposed Residential Development, Park Avenue, Liverpool

SCP Transportation Planning : Infrastructure Design	**26 August 2014**	**Traffic Figure 2**
	Job Number - SCP/14197	

S|C|P

APPENDIX 2

		area	no.	total area
BA	BA	circa.1813 sqft	2	circa.3626 sqft
BL	BL	circa.2343 sqft	3	circa.7029sqft
D	D	circa.1900 sqft	8	circa.15200 sqft
M	M	circa.1906 sqft	3	circa.5718 sqft
R	R	circa.2098 sqft	4	circa.8392sqft
B	B	circa.3201 sqft	5	circa.16005 sqft
F	F	circa.2978 sqft	4	circa.11912sqft
G	G	circa.2580 sqft	5	circa.12900 sqft
Total			34	circa.80,782 sqft

calderpeel
calderpeel architects
market court, 20-24 church street
altrincham, cheshire, WA14 4DW
t.0161 929 7622 f.0161 929 7655

Redrow Homes
Park Avenue, Liverpool

PROPOSED SITE PLAN

04.12.14 AG 1:500 @ A1

14082 (PI) 001 L

revision	date	drawn	description
C	03.11.14	AG	Expanded area schedule breakdown
D	07.11.14	AG	Changes to road layouts and boundaries
E	07.11.14	AG	D Type orientation change, carports and patios added
F	12.11.14	AG	Boundary changes following TEP & Redrow comments
G	12.11.14	AG	OS Data Inserted
H	17.11.14	AG	Plot Numbers Added
J	18.11.14	AG	Plot numbers edited
K	02.12.14	AG	Apartments removed and area redeveloped.
L	04.12.14	AG	Boundary Amendments

S|C|P

APPENDIX 3

Ensuring Choice of Travel SPD - Accessibility Assessment

Site Description / Address: **Residential Development, Park Avenue, Sefton Park, Liverpool**				
Access diagram				**Score**
Has a diagram been submitted which how people move to and through the place and how this links to surrounding roads, footpaths and sight lines?				**Yes**/No
Access on foot				**Score**
Safety	Is there safe pedestrian access to and within the site, and for pedestrians passing the site? Including footways no less than 2m on both sides of the road?			**Yes**/No
Location	Housing development: Is the development within 500 metres of a district or local centre (see Accessibility Map 1 in Appendix F)? Other development: Is the density of local housing (i.e. within 800 metres) greater than 50 houses per hectare (see Accessibility Map 4 in Appendix F)?	Yes	2 points	**0**
		No	0 points	
Internal layout	Does 'circulation' and access inside the site reflect direct, safe and easy to use pedestrian routes for all, with priority given to pedestrians when they have to cross roads or cycle routes?	Yes	1 point	**1**
		No	0 points	
External layout	Are there barriers between site and local facilities or housing, which restrict pedestrian access? (see Merseyside Code of Practice on Access and Mobility), e.g. • No dropped kerbs at crossing or on desire lines; • No steep gradients; • A lack of a formal crossing where there is heavy traffic; or • Security concerns, e.g. as a result of lack of lighting	There are barriers	-2 points	**1**
		There are no barriers	1 point	
Other	Links to identified recreational walking network (see Accessibility Map 1)			**Yes**/No
Summary	Minimum Score (from Table 3)	**4**		
	Actual Score	**2**		
	Comments or action needed to correct any shortfall			
Access by Cycle				**Score**
Safety	Are there safety issues for cyclists either turning into or out of the site or at road junctions within 400 metres of the site (e.g. dangerous right turns for cyclists due to the level of traffic)?			Yes/**No**
Cycle parking	Does the development meet cycle parking standards in a secure location with natural surveillance? (see table 7) - or where appropriate contribute to communal cycle parking facilities?			**Yes**/No

Location	Housing development: Is the development within 1 mile of a district or local centre (see Accessibility Map 1)? Other development: Is the density of local housing (i.e. within 1 mile) greater than 50 houses per hectare (see Accessibility Map 4)?	Yes	2 points	2
		No	0 points	
Internal layout	Does 'circulation' and access inside the site reflect direct and safe cycle routes, with priority given to cyclists where they meet motor vehicles?	Yes	1 point	1
		No	0 points	
External layout	The development is within 400 metre of an existing proposed cycle route (see Accessiblity Map 1) and is connected or proposes to create a link to a cycle route, or develop a route		1 point	1
	The development is not within 400 metres of an existing or proposed cycle route (see Accessibility Map 1)		-1 point	
Other	Development includes shower facilities and lockers for cyclists		1 point	1
Summary	Minimum Score (from Table 3)	5		
	Actual Score	5		
	Comments or action needed to correct any shortfall			
Access by Public Transport				**Score**
Location and access to public transport	Is the site within a 200 metre walk of a bus stop and/or within 400 metres of a rail station? (see Accessibility Map 2)	Yes	2 points	2
		No	0 points	
	Are there barriers on direct and safe pedestrian routes to bus stops or rail stations, i.e. • A lack of dropped kerbs • Pavements less than 2.00 metre wide • A lack of formal crossings where there is heavy traffic • Bus access kerbs	There are barriers	0 point	1
		There are no barriers	1 point	
Frequency	High (4 or more bus services or trains an hour)		2 points	2
	Medium (2 or 3 bus services or trains an hour)		1 point	
	Low (less than 2 bus services or trains an hour)		0 points	
Other	The proposal contributes to bus priority measures serving the site		1 point	
	The proposal contributes to bus stops, bus interchange or bus or rail stations in the vicinity and/or provides bus stops or bus interchange in the site		1 point	
	The proposal contributes to an existing or new supported bus service (Merseytravel or Community Transport)		1 point	
Summary	Minimum Score (from Table 3)	5		
	Actual Score	5		
	Comments or action needed to correct any shortfall			

Vehicle access and parking			Score
Vehicle access and circulation	Is there safe access to and from the road?		**Yes**/No
	Can the site be adequately serviced?		**Yes**/No
	Is the safety and convenience of other users (pedestrians, cyclists and public transport) affected by the proposal?		Yes/**No**
	Has access for the emergency services been provided?		**Yes**/No
	For development, which generates significant freight movements, is the site easily accessed from the road or rail freight route networks (i.e. minimising the impact of traffic on local roads and neighbourhoods) (see Accessibility Map 3)?		Yes/No
Parking	The off-street parking provided is more than advised for that development type		**Yes**/No
	The off-street parking provided is as advised for that development	1 point	**1**
	The off-street parking provided is less than 75% of the amount advised for that development type (or shares parking provision with another development)	2 points	
	For development in controlled parking zones:		
	- is a car free development	1 point	
	- supports the control or removal of on-street parking (inc provision of disabled spaces) or contributes to other identified measures in the local parking strategy (including car clubs)	1 point	
Summary	Minimum Score	**1**	
	Actual Score	**1**	
	Comments or action needed to correct any shortfall		

S|C|P

APPENDIX 4

TRIP RATE CALCULATION SELECTION PARAMETERS:

Land Use : 03 - RESIDENTIAL
Category : A - HOUSES PRIVATELY OWNED
MULTI-MODAL VEHICLES

Selected regions and areas:

01	**GREATER LONDON**		
	BT	BRENT	1 days
	KI	KINGSTON	1 days
	KN	KENSINGTON AND CHELSEA	1 days
02	**SOUTH EAST**		
	ES	EAST SUSSEX	1 days
03	**SOUTH WEST**		
	CW	CORNWALL	1 days
	WL	WILTSHIRE	1 days
04	**EAST ANGLIA**		
	NF	NORFOLK	2 days
	SF	SUFFOLK	1 days
05	**EAST MIDLANDS**		
	DS	DERBYSHIRE	1 days
	LN	LINCOLNSHIRE	1 days
06	**WEST MIDLANDS**		
	WM	WEST MIDLANDS	2 days
	WO	WORCESTERSHIRE	1 days
07	**YORKSHIRE & NORTH LINCOLNSHIRE**		
	NY	NORTH YORKSHIRE	2 days
08	**NORTH WEST**		
	GM	GREATER MANCHESTER	1 days
	LC	LANCASHIRE	1 days
09	**NORTH**		
	CB	CUMBRIA	2 days

This section displays the number of survey days per TRICS® sub-region in the selected set

Filtering Stage 2 selection:

This data displays the chosen trip rate parameter and its selected range. Only sites that fall within the parameter range are included in the trip rate calculation.

Parameter:	Number of dwellings
Actual Range:	20 to 99 (units:)
Range Selected by User:	20 to 100 (units:)

Public Transport Provision:
Selection by: Include all surveys

Date Range: 01/01/05 to 14/06/13

This data displays the range of survey dates selected. Only surveys that were conducted within this date range are included in the trip rate calculation.

Selected survey days:

Monday	4 days
Tuesday	7 days
Wednesday	2 days
Thursday	3 days
Friday	4 days

This data displays the number of selected surveys by day of the week.

Selected survey types:

Manual count	20 days
Directional ATC Count	0 days

This data displays the number of manual classified surveys and the number of unclassified ATC surveys, the total adding up to the overall number of surveys in the selected set. Manual surveys are undertaken using staff, whilst ATC surveys are undertaking using machines.

Selected Locations:

Suburban Area (PPS6 Out of Centre)	10
Edge of Town	9
Neighbourhood Centre (PPS6 Local Centre)	1

This data displays the number of surveys per main location category within the selected set. The main location categories consist of Free Standing, Edge of Town, Suburban Area, Neighbourhood Centre, Edge of Town Centre, Town Centre and Not Known.

Selected Location Sub Categories:

Residential Zone	16
Built-Up Zone	1
No Sub Category	3

This data displays the number of surveys per location sub-category within the selected set. The location sub-categories consist of Commercial Zone, Industrial Zone, Development Zone, Residential Zone, Retail Zone, Built-Up Zone, Village, Out of Town, High Street and No Sub Category.

Filtering Stage 3 selection:

Use Class:

C3	20 days

This data displays the number of surveys per Use Class classification within the selected set. The Use Classes Order 2005 has been used for this purpose, which can be found within the Library module of TRICS®.

Filtering Stage 3 selection (Cont.):

Population within 1 mile:

1,001 to 5,000	1 days
5,001 to 10,000	4 days
10,001 to 15,000	6 days
15,001 to 20,000	4 days
20,001 to 25,000	1 days
25,001 to 50,000	3 days
50,001 to 100,000	1 days

This data displays the number of selected surveys within stated 1-mile radii of population.

Population within 5 miles:

5,001 to 25,000	2 days
25,001 to 50,000	3 days
50,001 to 75,000	1 days
75,001 to 100,000	2 days
100,001 to 125,000	2 days
125,001 to 250,000	3 days
250,001 to 500,000	3 days
500,001 or More	4 days

This data displays the number of selected surveys within stated 5-mile radii of population.

Car ownership within 5 miles:

0.5 or Less	2 days
0.6 to 1.0	8 days
1.1 to 1.5	10 days

This data displays the number of selected surveys within stated ranges of average cars owned per residential dwelling, within a radius of 5-miles of selected survey sites.

Travel Plan:

Yes	1 days
No	19 days

This data displays the number of surveys within the selected set that were undertaken at sites with Travel Plans in place, and the number of surveys that were undertaken at sites without Travel Plans.

LIST OF SITES relevant to selection parameters

1 BT-03-A-01 SEMI DETATCHED BRENT
KENTON ROAD

BRENT
Suburban Area (PPS6 Out of Centre)
Residential Zone
Total Number of dwellings: 82
Survey date: TUESDAY 20/11/07 Survey Type: MANUAL

2 CB-03-A-03 SEMI DETACHED CUMBRIA
HAWKSHEAD AVENUE

WORKINGTON
Edge of Town
Residential Zone
Total Number of dwellings: 40
Survey date: THURSDAY 20/11/08 Survey Type: MANUAL

3 CB-03-A-04 SEMI DETACHED CUMBRIA
MOORCLOSE ROAD
SALTERBACK
WORKINGTON
Edge of Town
No Sub Category
Total Number of dwellings: 82
Survey date: FRIDAY 24/04/09 Survey Type: MANUAL

4 CW-03-A-02 SEMI D./DETATCHED CORNWALL
BOSVEAN GARDENS

TRURO
Suburban Area (PPS6 Out of Centre)
Residential Zone
Total Number of dwellings: 73
Survey date: TUESDAY 18/09/07 Survey Type: MANUAL

5 DS-03-A-01 SEMI D./TERRACED DERBYSHIRE
THE AVENUE
HOLMESDALE
DRONFIELD
Neighbourhood Centre (PPS6 Local Centre)
Residential Zone
Total Number of dwellings: 20
Survey date: THURSDAY 22/06/06 Survey Type: MANUAL

6 ES-03-A-02 PRIVATE HOUSING EAST SUSSEX
SOUTH COAST ROAD

PEACEHAVEN
Edge of Town
Residential Zone
Total Number of dwellings: 37
Survey date: FRIDAY 18/11/11 Survey Type: MANUAL

7 GM-03-A-10 DETACHED/SEMI GREATER MANCHESTER
BUTT HILL DRIVE
PRESTWICH
MANCHESTER
Edge of Town
Residential Zone
Total Number of dwellings: 29
Survey date: WEDNESDAY 12/10/11 Survey Type: MANUAL

LIST OF SITES relevant to selection parameters (Cont.)

8 KI-03-A-02 DETACHED KINGSTON
WOLSEY CLOSE

KINGSTON UPON THAMES
Suburban Area (PPS6 Out of Centre)
Residential Zone
Total Number of dwellings: 20
Survey date: THURSDAY 24/06/10 Survey Type: MANUAL

9 KN-03-A-01 TERRACED KENSINGTON AND CHELSEA
BARLBY ROAD

NORTH KENSINGTON
Suburban Area (PPS6 Out of Centre)
Built-Up Zone
Total Number of dwellings: 24
Survey date: FRIDAY 26/01/07 Survey Type: MANUAL

10 LC-03-A-22 BUNGALOWS LANCASHIRE
CLIFTON DRIVE NORTH

BLACKPOOL
Edge of Town
Residential Zone
Total Number of dwellings: 98
Survey date: TUESDAY 18/10/05 Survey Type: MANUAL

11 LN-03-A-03 SEMI DETACHED LINCOLNSHIRE
ROOKERY LANE
BOULTHAM
LINCOLN
Suburban Area (PPS6 Out of Centre)
Residential Zone
Total Number of dwellings: 22
Survey date: TUESDAY 18/09/12 Survey Type: MANUAL

12 NF-03-A-01 SEMI DET. & BUNGALOWS NORFOLK
YARMOUTH ROAD

CAISTER-ON-SEA
Suburban Area (PPS6 Out of Centre)
Residential Zone
Total Number of dwellings: 27
Survey date: TUESDAY 16/10/12 Survey Type: MANUAL

13 NF-03-A-02 HOUSES & FLATS NORFOLK
DEREHAM ROAD

NORWICH
Suburban Area (PPS6 Out of Centre)
Residential Zone
Total Number of dwellings: 98
Survey date: MONDAY 22/10/12 Survey Type: MANUAL

14 NY-03-A-01 MIXED HOUSES NORTH YORKSHIRE
GRAMMAR SCHOOL LANE

NORTHALLERTON
Suburban Area (PPS6 Out of Centre)
Residential Zone
Total Number of dwellings: 52
Survey date: TUESDAY 25/09/07 Survey Type: MANUAL

LIST OF SITES relevant to selection parameters (Cont.)

15 NY-03-A-05 HOUSES AND FLATS NORTH YORKSHIRE
BOROUGHBRIDGE ROAD

RIPON
Edge of Town
No Sub Category
Total Number of dwellings: 71
Survey date: MONDAY 22/09/08 Survey Type: MANUAL

16 SF-03-A-01 SEMI DETACHED SUFFOLK
A1156 FELIXSTOWE ROAD
RACECOURSE
IPSWICH
Suburban Area (PPS6 Out of Centre)
Residential Zone
Total Number of dwellings: 77
Survey date: WEDNESDAY 23/05/07 Survey Type: MANUAL

17 WL-03-A-01 SEMI D./ TERRACED W. BASSETT WILTSHIRE
MAPLE DRIVE

WOOTTON BASSETT
Edge of Town
Residential Zone
Total Number of dwellings: 99
Survey date: MONDAY 02/10/06 Survey Type: MANUAL

18 WM-03-A-01 TERRACED WEST MIDLANDS
FOLESHILL ROAD
FOLESHILL
COVENTRY
Suburban Area (PPS6 Out of Centre)
Residential Zone
Total Number of dwellings: 79
Survey date: FRIDAY 03/02/06 Survey Type: MANUAL

19 WM-03-A-03 MIXED HOUSING WEST MIDLANDS
BASELEY WAY
ROWLEYS GREEN
COVENTRY
Edge of Town
Residential Zone
Total Number of dwellings: 84
Survey date: MONDAY 24/09/07 Survey Type: MANUAL

20 WO-03-A-02 SEMI DETACHED WORCESTERSHIRE
MEADOWHILL ROAD

REDDITCH
Edge of Town
No Sub Category
Total Number of dwellings: 48
Survey date: TUESDAY 02/05/06 Survey Type: MANUAL

This section provides a list of all survey sites and days in the selected set. For each individual survey site, it displays a unique site reference code and site address, the selected trip rate calculation parameter and its value, the day of the week and date of each survey, and whether the survey was a manual classified count or an ATC count.

TRIP RATE for Land Use 03 - RESIDENTIAL/A - HOUSES PRIVATELY OWNED

MULTI-MODAL VEHICLES

Calculation factor: 1 DWELLS

BOLD print indicates peak (busiest) period

	ARRIVALS			DEPARTURES			TOTALS		
Time Range	No. Days	Ave. DWELLS	Trip Rate	No. Days	Ave. DWELLS	Trip Rate	No. Days	Ave. DWELLS	Trip Rate
00:00 - 01:00									
01:00 - 02:00									
02:00 - 03:00									
03:00 - 04:00									
04:00 - 05:00									
05:00 - 06:00									
06:00 - 07:00									
07:00 - 08:00	20	58	0.071	20	58	0.278	20	58	0.349
08:00 - 09:00	20	58	0.170	**20**	**58**	**0.377**	20	58	0.547
09:00 - 10:00	20	58	0.187	20	58	0.222	20	58	0.409
10:00 - 11:00	20	58	0.153	20	58	0.187	20	58	0.340
11:00 - 12:00	20	58	0.208	20	58	0.188	20	58	0.396
12:00 - 13:00	20	58	0.205	20	58	0.170	20	58	0.375
13:00 - 14:00	20	58	0.174	20	58	0.174	20	58	0.348
14:00 - 15:00	20	58	0.207	20	58	0.213	20	58	0.420
15:00 - 16:00	20	58	0.262	20	58	0.214	20	58	0.476
16:00 - 17:00	20	58	0.328	20	58	0.208	20	58	0.536
17:00 - 18:00	**20**	**58**	**0.349**	20	58	0.204	**20**	**58**	**0.553**
18:00 - 19:00	20	58	0.271	20	58	0.194	20	58	0.465
19:00 - 20:00									
20:00 - 21:00									
21:00 - 22:00									
22:00 - 23:00									
23:00 - 24:00									
Total Rates:			2.585			2.629			5.214

This section displays the trip rate results based on the selected set of surveys and the selected count type (shown just above the table). It is split by three main columns, representing arrivals trips, departures trips, and total trips (arrivals plus departures). Within each of these main columns are three sub-columns. These display the number of survey days where count data is included (per time period), the average value of the selected trip rate calculation parameter (per time period), and the trip rate result (per time period). Total trip rates (the sum of the column) are also displayed at the foot of the table.

To obtain a trip rate, the average (mean) trip rate parameter value (TRP) is first calculated for all selected survey days that have count data available for the stated time period. The average (mean) number of arrivals, departures or totals (whichever applies) is also calculated (COUNT) for all selected survey days that have count data available for the stated time period. Then, the average count is divided by the average trip rate parameter value, and multiplied by the stated calculation factor (shown just above the table and abbreviated here as FACT). So, the method is: COUNT/TRP FACT. Trip rates are then rounded to 3 decimal places.*

Parameter summary

Trip rate parameter range selected:	20 - 99 (units:)
Survey date date range:	01/01/05 - 14/06/13
Number of weekdays (Monday-Friday):	20
Number of Saturdays:	0
Number of Sundays:	0
Surveys manually removed from selection:	1

This section displays a quick summary of some of the data filtering selections made by the TRICS® user. The trip rate calculation parameter range of all selected surveys is displayed first, followed by the range of minimum and maximum survey dates selected by the user. Then, the total number of selected weekdays and weekend days in the selected set of surveys are show. Finally, the number of survey days that have been manually removed from the selected set outside of the standard filtering procedure are displayed.

TRIP RATE for Land Use 03 - RESIDENTIAL/A - HOUSES PRIVATELY OWNED

MULTI-MODAL CYCLISTS

Calculation factor: 1 DWELLS

BOLD print indicates peak (busiest) period

	ARRIVALS			DEPARTURES			TOTALS		
Time Range	No. Days	Ave. DWELLS	Trip Rate	No. Days	Ave. DWELLS	Trip Rate	No. Days	Ave. DWELLS	Trip Rate
00:00 - 01:00									
01:00 - 02:00									
02:00 - 03:00									
03:00 - 04:00									
04:00 - 05:00									
05:00 - 06:00									
06:00 - 07:00									
07:00 - 08:00	20	58	0.007	20	58	0.015	20	58	0.022
08:00 - 09:00	20	58	0.003	20	58	0.017	20	58	0.020
09:00 - 10:00	20	58	0.003	20	58	0.005	20	58	0.008
10:00 - 11:00	20	58	0.006	20	58	0.008	20	58	0.014
11:00 - 12:00	20	58	0.006	20	58	0.001	20	58	0.007
12:00 - 13:00	20	58	0.008	20	58	0.003	20	58	0.011
13:00 - 14:00	20	58	0.001	20	58	0.003	20	58	0.004
14:00 - 15:00	20	58	0.000	20	58	0.007	20	58	0.007
15:00 - 16:00	20	58	0.013	20	58	0.007	20	58	0.020
16:00 - 17:00	20	58	0.015	**20**	**58**	**0.019**	**20**	**58**	**0.034**
17:00 - 18:00	**20**	**58**	**0.023**	20	58	0.007	20	58	0.030
18:00 - 19:00	20	58	0.010	20	58	0.009	20	58	0.019
19:00 - 20:00									
20:00 - 21:00									
21:00 - 22:00									
22:00 - 23:00									
23:00 - 24:00									
Total Rates:			0.095			0.101			0.196

This section displays the trip rate results based on the selected set of surveys and the selected count type (shown just above the table). It is split by three main columns, representing arrivals trips, departures trips, and total trips (arrivals plus departures). Within each of these main columns are three sub-columns. These display the number of survey days where count data is included (per time period), the average value of the selected trip rate calculation parameter (per time period), and the trip rate result (per time period). Total trip rates (the sum of the column) are also displayed at the foot of the table.

To obtain a trip rate, the average (mean) trip rate parameter value (TRP) is first calculated for all selected survey days that have count data available for the stated time period. The average (mean) number of arrivals, departures or totals (whichever applies) is also calculated (COUNT) for all selected survey days that have count data available for the stated time period. Then, the average count is divided by the average trip rate parameter value, and multiplied by the stated calculation factor (shown just above the table and abbreviated here as FACT). So, the method is: COUNT/TRP FACT. Trip rates are then rounded to 3 decimal places.*

Parameter summary

Trip rate parameter range selected:	20 - 99 (units:)
Survey date date range:	01/01/05 - 14/06/13
Number of weekdays (Monday-Friday):	20
Number of Saturdays:	0
Number of Sundays:	0
Surveys manually removed from selection:	1

This section displays a quick summary of some of the data filtering selections made by the TRICS® user. The trip rate calculation parameter range of all selected surveys is displayed first, followed by the range of minimum and maximum survey dates selected by the user. Then, the total number of selected weekdays and weekend days in the selected set of surveys are show. Finally, the number of survey days that have been manually removed from the selected set outside of the standard filtering procedure are displayed.

TRIP RATE for Land Use 03 - RESIDENTIAL/A - HOUSES PRIVATELY OWNED

MULTI-MODAL PEDESTRIANS

Calculation factor: 1 DWELLS

BOLD print indicates peak (busiest) period

	ARRIVALS			DEPARTURES			TOTALS		
Time Range	No. Days	Ave. DWELLS	Trip Rate	No. Days	Ave. DWELLS	Trip Rate	No. Days	Ave. DWELLS	Trip Rate
00:00 - 01:00									
01:00 - 02:00									
02:00 - 03:00									
03:00 - 04:00									
04:00 - 05:00									
05:00 - 06:00									
06:00 - 07:00									
07:00 - 08:00	20	58	0.030	20	58	0.077	20	58	0.107
08:00 - 09:00	20	58	0.056	**20**	**58**	**0.227**	**20**	**58**	**0.283**
09:00 - 10:00	20	58	0.065	20	58	0.078	20	58	0.143
10:00 - 11:00	20	58	0.050	20	58	0.074	20	58	0.124
11:00 - 12:00	20	58	0.077	20	58	0.056	20	58	0.133
12:00 - 13:00	20	58	0.074	20	58	0.060	20	58	0.134
13:00 - 14:00	20	58	0.059	20	58	0.052	20	58	0.111
14:00 - 15:00	20	58	0.059	20	58	0.059	20	58	0.118
15:00 - 16:00	**20**	**58**	**0.152**	20	58	0.084	20	58	0.236
16:00 - 17:00	20	58	0.122	20	58	0.069	20	58	0.191
17:00 - 18:00	20	58	0.093	20	58	0.054	20	58	0.147
18:00 - 19:00	20	58	0.078	20	58	0.071	20	58	0.149
19:00 - 20:00									
20:00 - 21:00									
21:00 - 22:00									
22:00 - 23:00									
23:00 - 24:00									
Total Rates:			0.915			0.961			1.876

This section displays the trip rate results based on the selected set of surveys and the selected count type (shown just above the table). It is split by three main columns, representing arrivals trips, departures trips, and total trips (arrivals plus departures). Within each of these main columns are three sub-columns. These display the number of survey days where count data is included (per time period), the average value of the selected trip rate calculation parameter (per time period), and the trip rate result (per time period). Total trip rates (the sum of the column) are also displayed at the foot of the table.

To obtain a trip rate, the average (mean) trip rate parameter value (TRP) is first calculated for all selected survey days that have count data available for the stated time period. The average (mean) number of arrivals, departures or totals (whichever applies) is also calculated (COUNT) for all selected survey days that have count data available for the stated time period. Then, the average count is divided by the average trip rate parameter value, and multiplied by the stated calculation factor (shown just above the table and abbreviated here as FACT). So, the method is: COUNT/TRP FACT. Trip rates are then rounded to 3 decimal places.*

Parameter summary

Trip rate parameter range selected:	20 - 99 (units:)
Survey date date range:	01/01/05 - 14/06/13
Number of weekdays (Monday-Friday):	20
Number of Saturdays:	0
Number of Sundays:	0
Surveys manually removed from selection:	1

This section displays a quick summary of some of the data filtering selections made by the TRICS® user. The trip rate calculation parameter range of all selected surveys is displayed first, followed by the range of minimum and maximum survey dates selected by the user. Then, the total number of selected weekdays and weekend days in the selected set of surveys are show. Finally, the number of survey days that have been manually removed from the selected set outside of the standard filtering procedure are displayed.

TRIP RATE for Land Use 03 - RESIDENTIAL/A - HOUSES PRIVATELY OWNED

MULTI-MODAL PUBLIC TRANSPORT USERS

Calculation factor: 1 DWELLS

BOLD print indicates peak (busiest) period

	ARRIVALS			DEPARTURES			TOTALS		
Time Range	No. Days	Ave. DWELLS	Trip Rate	No. Days	Ave. DWELLS	Trip Rate	No. Days	Ave. DWELLS	Trip Rate
00:00 - 01:00									
01:00 - 02:00									
02:00 - 03:00									
03:00 - 04:00									
04:00 - 05:00									
05:00 - 06:00									
06:00 - 07:00									
07:00 - 08:00	20	58	0.006	20	58	0.022	20	58	0.028
08:00 - 09:00	20	58	0.017	**20**	**58**	**0.032**	**20**	**58**	**0.049**
09:00 - 10:00	20	58	0.014	20	58	0.009	20	58	0.023
10:00 - 11:00	20	58	0.003	20	58	0.009	20	58	0.012
11:00 - 12:00	20	58	0.009	20	58	0.012	20	58	0.021
12:00 - 13:00	20	58	0.003	20	58	0.009	20	58	0.012
13:00 - 14:00	20	58	0.001	20	58	0.006	20	58	0.007
14:00 - 15:00	20	58	0.003	20	58	0.011	20	58	0.014
15:00 - 16:00	20	58	0.013	20	58	0.015	20	58	0.028
16:00 - 17:00	**20**	**58**	**0.018**	20	58	0.005	20	58	0.023
17:00 - 18:00	20	58	0.017	20	58	0.004	20	58	0.021
18:00 - 19:00	20	58	0.008	20	58	0.004	20	58	0.012
19:00 - 20:00									
20:00 - 21:00									
21:00 - 22:00									
22:00 - 23:00									
23:00 - 24:00									
Total Rates:			0.112			0.138			0.250

This section displays the trip rate results based on the selected set of surveys and the selected count type (shown just above the table). It is split by three main columns, representing arrivals trips, departures trips, and total trips (arrivals plus departures). Within each of these main columns are three sub-columns. These display the number of survey days where count data is included (per time period), the average value of the selected trip rate calculation parameter (per time period), and the trip rate result (per time period). Total trip rates (the sum of the column) are also displayed at the foot of the table.

To obtain a trip rate, the average (mean) trip rate parameter value (TRP) is first calculated for all selected survey days that have count data available for the stated time period. The average (mean) number of arrivals, departures or totals (whichever applies) is also calculated (COUNT) for all selected survey days that have count data available for the stated time period. Then, the average count is divided by the average trip rate parameter value, and multiplied by the stated calculation factor (shown just above the table and abbreviated here as FACT). So, the method is: COUNT/TRP FACT. Trip rates are then rounded to 3 decimal places.*

Parameter summary

Trip rate parameter range selected:	20 - 99 (units:)
Survey date date range:	01/01/05 - 14/06/13
Number of weekdays (Monday-Friday):	20
Number of Saturdays:	0
Number of Sundays:	0
Surveys manually removed from selection:	1

This section displays a quick summary of some of the data filtering selections made by the TRICS® user. The trip rate calculation parameter range of all selected surveys is displayed first, followed by the range of minimum and maximum survey dates selected by the user. Then, the total number of selected weekdays and weekend days in the selected set of surveys are show. Finally, the number of survey days that have been manually removed from the selected set outside of the standard filtering procedure are displayed.

TRIP RATE for Land Use 03 - RESIDENTIAL/A - HOUSES PRIVATELY OWNED

MULTI-MODAL TOTAL PEOPLE

Calculation factor: 1 DWELLS

BOLD print indicates peak (busiest) period

	ARRIVALS			DEPARTURES			TOTALS		
Time Range	No. Days	Ave. DWELLS	Trip Rate	No. Days	Ave. DWELLS	Trip Rate	No. Days	Ave. DWELLS	Trip Rate
00:00 - 01:00									
01:00 - 02:00									
02:00 - 03:00									
03:00 - 04:00									
04:00 - 05:00									
05:00 - 06:00									
06:00 - 07:00									
07:00 - 08:00	20	58	0.124	20	58	0.457	20	58	0.581
08:00 - 09:00	20	58	0.276	**20**	**58**	**0.806**	**20**	**58**	**1.082**
09:00 - 10:00	20	58	0.305	20	58	0.385	20	58	0.690
10:00 - 11:00	20	58	0.254	20	58	0.330	20	58	0.584
11:00 - 12:00	20	58	0.350	20	58	0.298	20	58	0.648
12:00 - 13:00	20	58	0.343	20	58	0.288	20	58	0.631
13:00 - 14:00	20	58	0.274	20	58	0.284	20	58	0.558
14:00 - 15:00	20	58	0.325	20	58	0.354	20	58	0.679
15:00 - 16:00	20	58	0.569	20	58	0.386	20	58	0.955
16:00 - 17:00	20	58	0.588	20	58	0.365	20	58	0.953
17:00 - 18:00	**20**	**58**	**0.593**	20	58	0.336	20	58	0.929
18:00 - 19:00	20	58	0.448	20	58	0.339	20	58	0.787
19:00 - 20:00									
20:00 - 21:00									
21:00 - 22:00									
22:00 - 23:00									
23:00 - 24:00									
Total Rates:			4.449			4.628			9.077

This section displays the trip rate results based on the selected set of surveys and the selected count type (shown just above the table). It is split by three main columns, representing arrivals trips, departures trips, and total trips (arrivals plus departures). Within each of these main columns are three sub-columns. These display the number of survey days where count data is included (per time period), the average value of the selected trip rate calculation parameter (per time period), and the trip rate result (per time period). Total trip rates (the sum of the column) are also displayed at the foot of the table.

To obtain a trip rate, the average (mean) trip rate parameter value (TRP) is first calculated for all selected survey days that have count data available for the stated time period. The average (mean) number of arrivals, departures or totals (whichever applies) is also calculated (COUNT) for all selected survey days that have count data available for the stated time period. Then, the average count is divided by the average trip rate parameter value, and multiplied by the stated calculation factor (shown just above the table and abbreviated here as FACT). So, the method is: COUNT/TRP FACT. Trip rates are then rounded to 3 decimal places.*

Parameter summary

Trip rate parameter range selected:	20 - 99 (units:)
Survey date date range:	01/01/05 - 14/06/13
Number of weekdays (Monday-Friday):	20
Number of Saturdays:	0
Number of Sundays:	0
Surveys manually removed from selection:	1

This section displays a quick summary of some of the data filtering selections made by the TRICS® user. The trip rate calculation parameter range of all selected surveys is displayed first, followed by the range of minimum and maximum survey dates selected by the user. Then, the total number of selected weekdays and weekend days in the selected set of surveys are show. Finally, the number of survey days that have been manually removed from the selected set outside of the standard filtering procedure are displayed.

S|C|P

APPENDIX 5

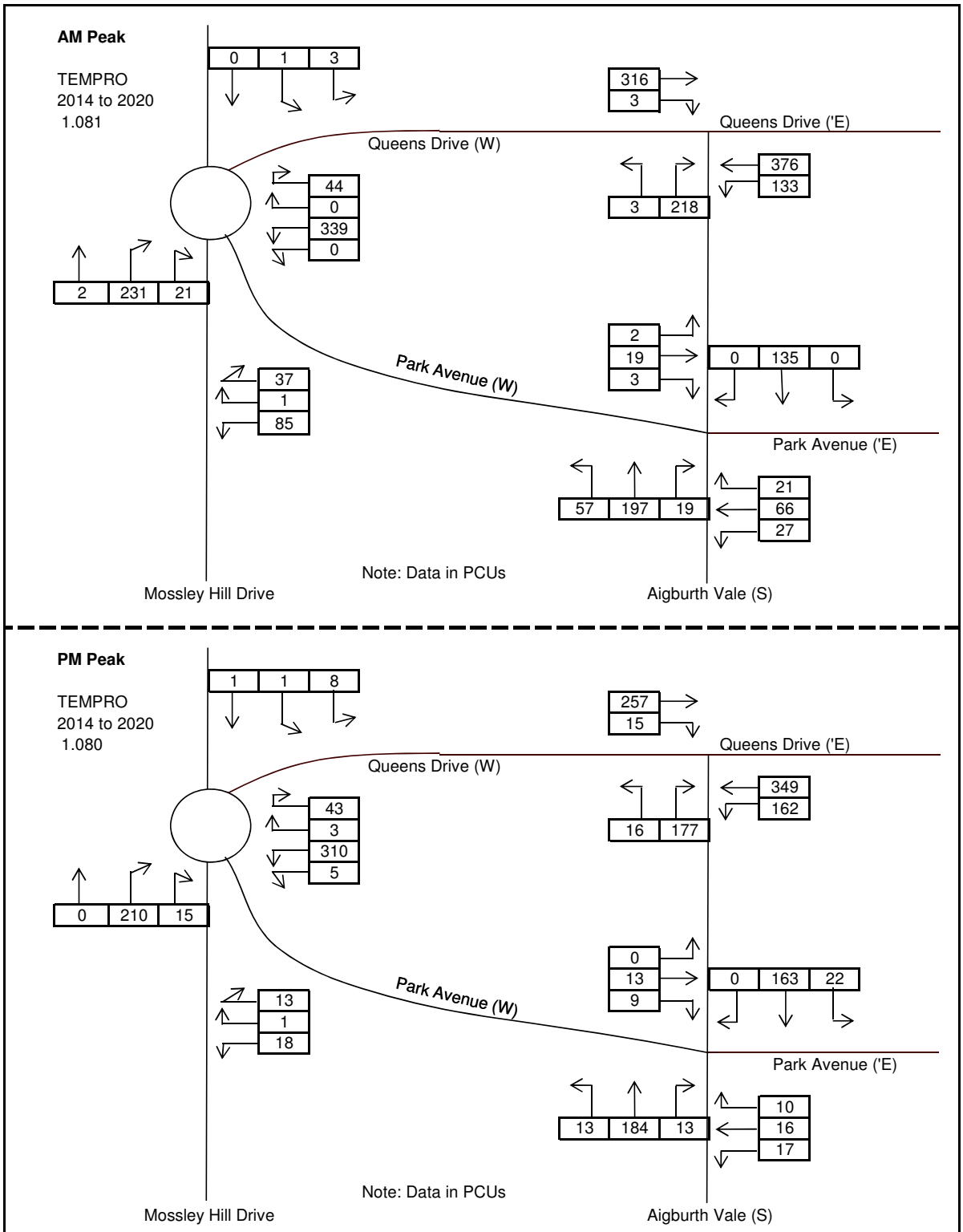

Observed Peak Hour Flows - June 2014

Proposed Residential Development, Park Avenue, Liverpool

SCP
Transportation Planning : Infrastructure Design

26 August 2014

Job Number - SCP/14197

Traffic Figure 4

S|C|P

APPENDIX 6

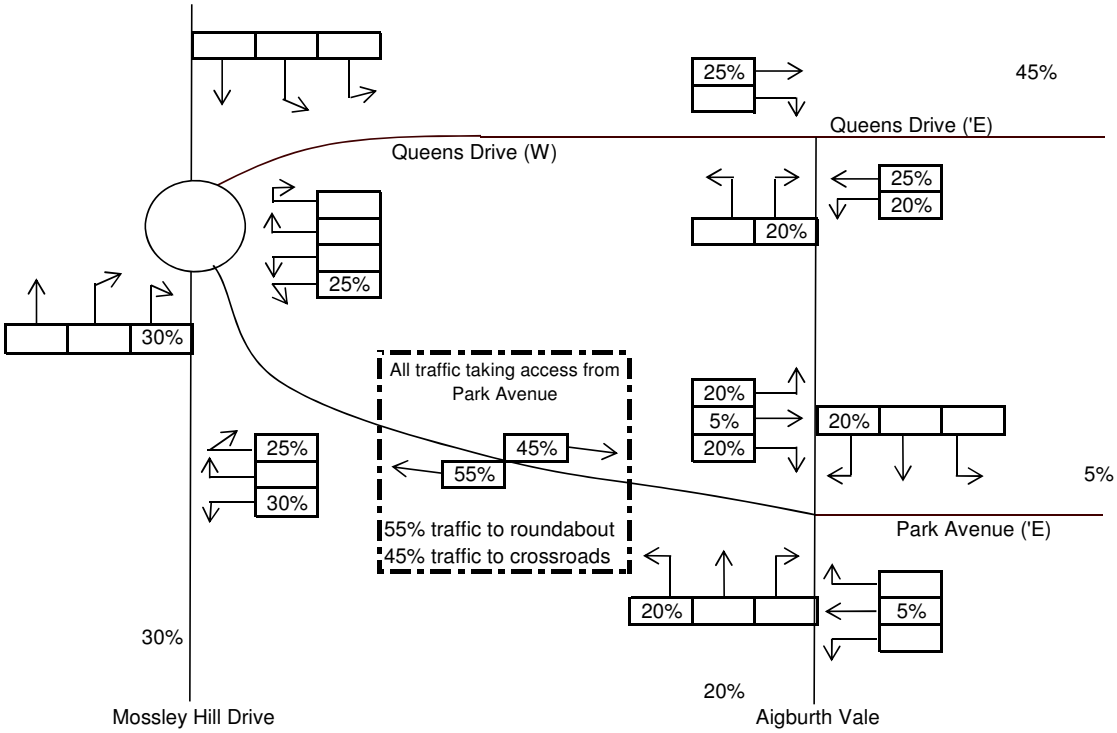

Trip Distribution

Proposed Residential Development, Park Avenue, Liverpool

SCP Transportation Planning : Infrastructure Design	**26 August 2014**	**Traffic Figure 5**
	Job Number - SCP/14197	

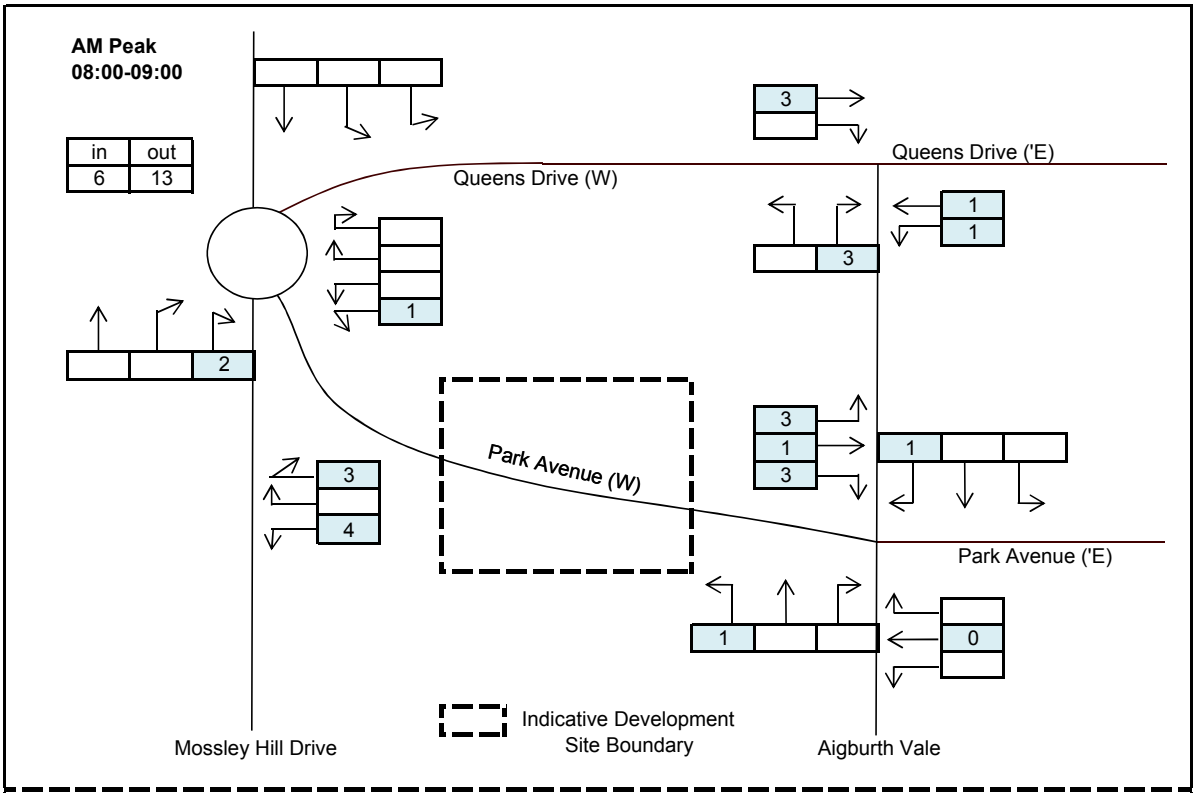

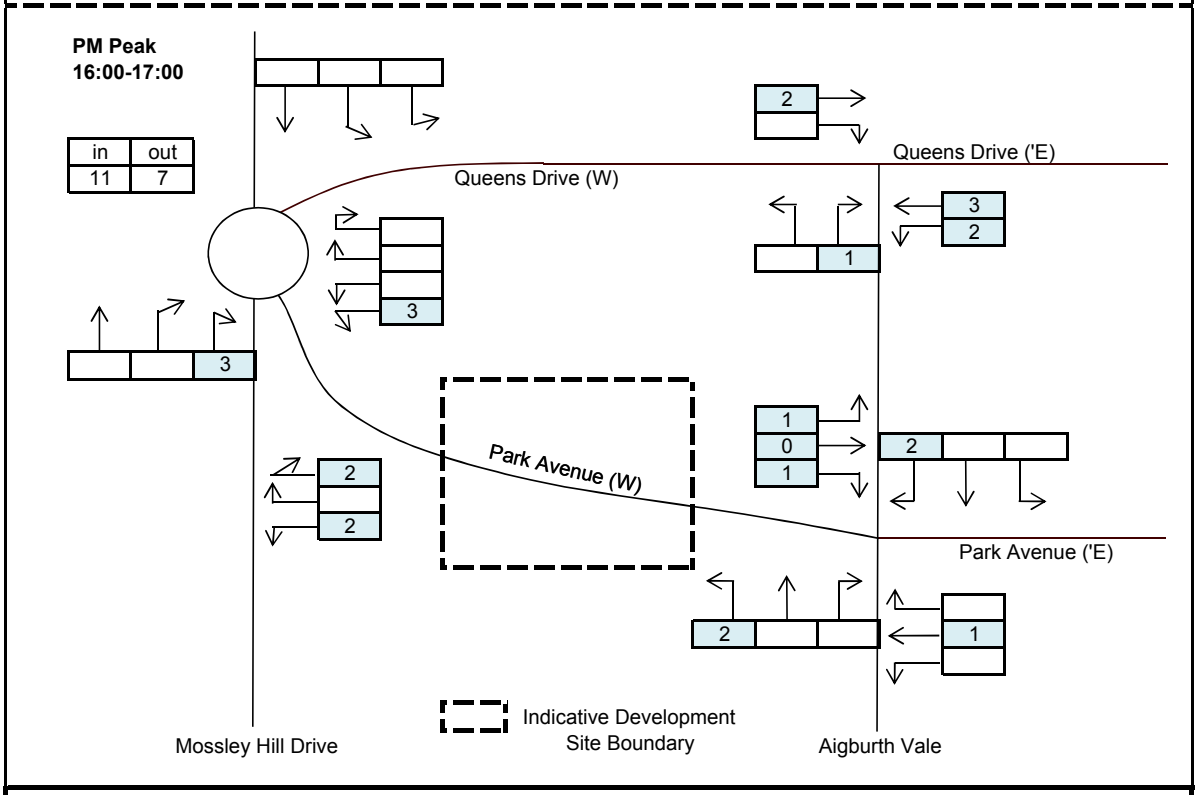

Proposed Development Flows

Proposed Residential Development, Park Avenue, Liverpool

SCP
Transportation Planning : Infrastructure Design

10 December 2014

Job Number - SCP/14197

Traffic Figure 6

S|C|P

APPENDIX 7

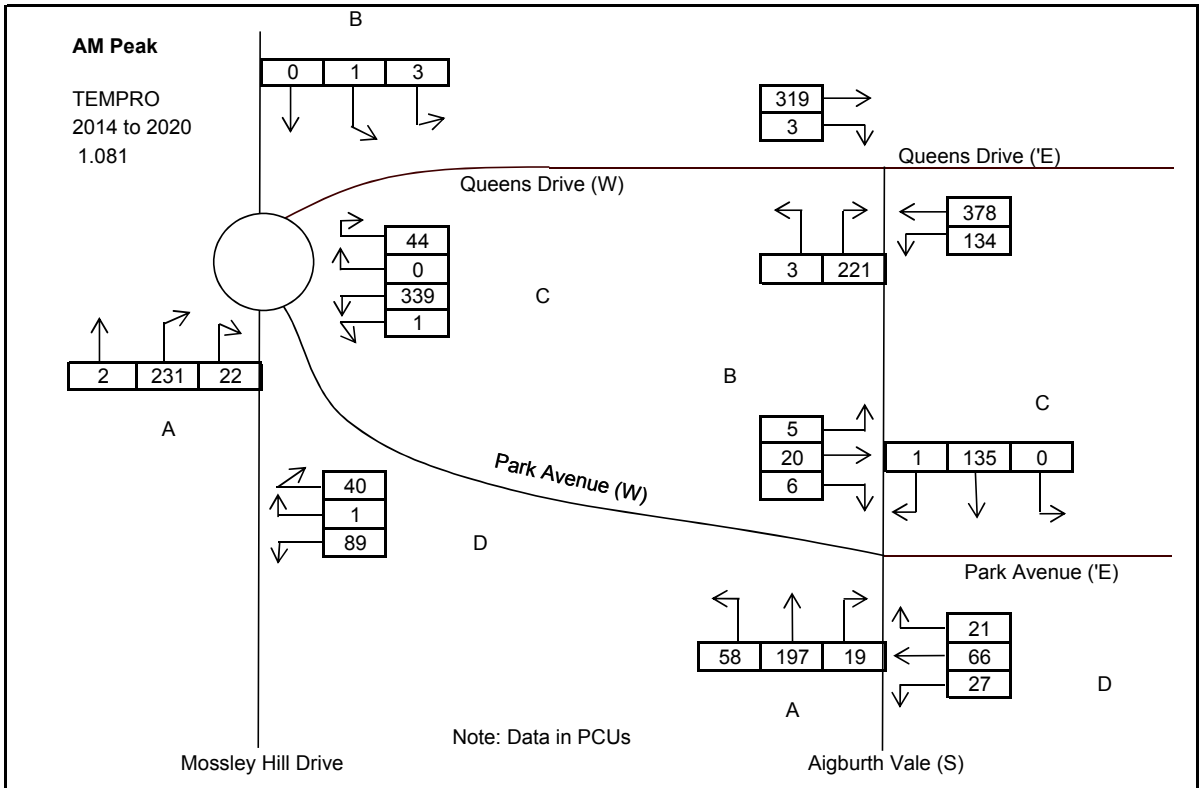

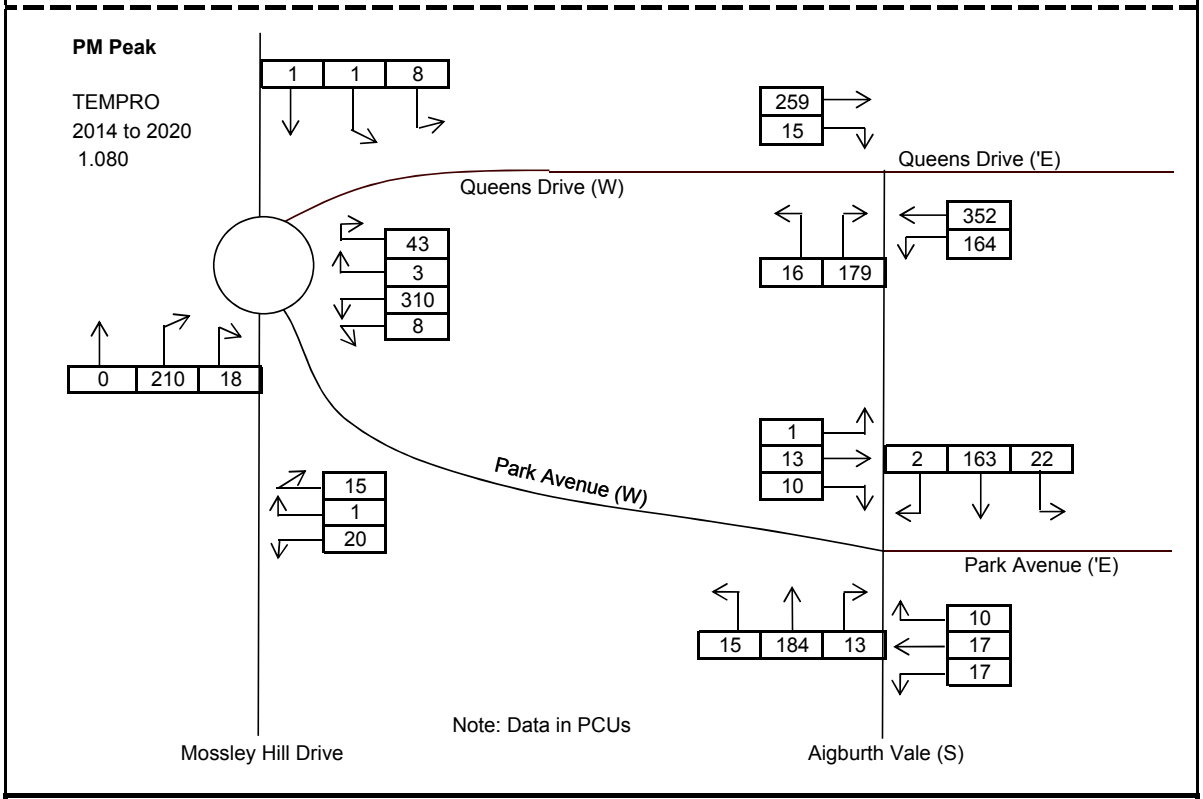

Base + Proposed Development Flows for 2020

Proposed Residential Development, Park Avenue, Liverpool

SCP
Transportation Planning : Infrastructure Design

10 December 2014

Job Number - SCP/14197

Traffic Figure 8

S|C|P

APPENDIX 8

Junctions 8

PICADY 8 - Priority Intersection Module

Version: 8.0.4.487 [15039,24/03/2014]
© Copyright TRL Limited, 2014

For sales and distribution information, program advice and maintenance, contact TRL:
Tel: +44 (0)1344 770758 email: software@trl.co.uk Web: http://www.trlsoftware.co.uk

The users of this computer program for the solution of an engineering problem are in no way relieved of their responsibility for the correctness of the solution

Filename: PICADY - Queens Drive_Aigburth Vale.arc8
Path: Z:\Job Library\2014\14197 - Park Avenue, Sefton Park, Liverpool\Traffic Data
Report generation date: 26/08/2014 14:09:43

» 2015 base + dev, AM
» 2015 base + dev, PM
» 2020 base + dev, AM
» 2020 base + dev, PM

Summary of junction performance

	AM			PM		
	Queue (PCU)	Delay (s)	RFC	Queue (PCU)	Delay (s)	RFC
	2015 base + dev					
Stream B-AC	1.56	25.03	0.62	1.03	18.91	0.51
Stream C-AB	0.01	5.14	0.01	0.05	5.46	0.03
Stream C-A	-	-	-	-	-	-
Stream A-B	-	-	-	-	-	-
Stream A-C	-	-	-	-	-	-
	2020 base + dev					
Stream B-AC	2.04	30.77	0.68	1.26	21.68	0.56
Stream C-AB	0.01	5.10	0.01	0.05	5.44	0.04
Stream C-A	-	-	-	-	-	-
Stream A-B	-	-	-	-	-	-
Stream A-C	-	-	-	-	-	-

Values shown are the maximum values over all time segments. Delay is the maximum value of average delay per arriving vehicle.

"D1 - 2015 base + dev, AM " model duration: 07:45 - 09:15
"D3 - 2015 base + dev, PM" model duration: 15:45 - 17:15
"D4 - 2020 base + dev, AM" model duration: 07:45 - 09:15
"D5 - 2020 base + dev, PM" model duration: 15:45 - 17:15

Run using Junctions 8.0.4.487 at 26/08/2014 14:09:41

File summary

Title	Queens Drive_Aigburth Vale Assessment
Location	Liverpool
Site Number	
Date	10/07/2014
Version	
Status	DRAFT
Identifier	
Client	
Jobnumber	
Enumerator	NS
Description	

Analysis Options

Vehicle Length (m)	Do Queue Variations	Calculate Residual Capacity	Residual Capacity Criteria Type	RFC Threshold	Average Delay Threshold (s)	Queue Threshold (PCU)
5.75			N/A	0.85	36.00	20.00

Units

Distance Units	Speed Units	Traffic Units Input	Traffic Units Results	Flow Units	Average Delay Units	Total Delay Units	Rate Of Delay Units
m	kph	PCU	PCU	perHour	s	-Min	perMin

2015 base + dev, AM

Data Errors and Warnings

No errors or warnings

Analysis Set Details

Name	Roundabout Capacity Model	Description	Locked	Network Flow Scaling Factor (%)	Reason For Scaling Factors
	N/A			100.000	

Demand Set Details

Name	Scenario Name	Time Period Name	Description	Traffic Profile Type	Model Start Time (HH:mm)	Model Finish Time (HH:mm)	Model Time Period Length (min)	Time Segment Length (min)	Single Time Segment Only	Locked
2015 base + dev, AM	2015 base + dev	AM		ONE HOUR	07:45	09:15	90	15		

Junction Network

Junctions

Junction	Name	Junction Type	Major Road Direction	Arm Order	Junction Delay (s)	Junction LOS
1	untitled	T-Junction	Two-way	A,B,C	24.59	C

Junction Network Options

Driving Side	Lighting
Left	Normal/unknown

Arms

Arms

Arm	Arm	Name	Description	Arm Type
A	A	Queens Drive (E)		Major
B	B	Aigburth Vale		Minor
C	C	Queens Drive (W)		Major

Major Arm Geometry

Arm	Width of carriageway (m)	Has kerbed central reserve	Width of kerbed central reserve (m)	Has right turn bay	Width For Right Turn (m)	Visibility For Right Turn (m)	Blocks?	Blocking Queue (PCU)
C	7.50		0.00		2.20	100.00	✓	0.00

Geometries for Arm C are measured opposite Arm B. Geometries for Arm A (if relevant) are measured opposite Arm D.

Minor Arm Geometry

Arm	Minor Arm Type	Lane Width (m)	Lane Width (Left) (m)	Lane Width (Right) (m)	Width at give-way (m)	Width at 5m (m)	Width at 10m (m)	Width at 15m (m)	Width at 20m (m)	Estimate Flare Length	Flare Length (PCU)	Visibility To Left (m)	Visibility To Right (m)
B	One lane	3.00										50	50

Slope / Intercept / Capacity

Priority Intersection Slopes and Intercepts

Junction	Stream	Intercept (PCU/hr)	Slope for A-B	Slope for A-C	Slope for C-A	Slope for C-B
1	B-A	518.507	0.088	0.223	0.140	0.319
1	B-C	655.413	0.094	0.237	-	-
1	C-B	631.874	0.229	0.229	-	-

The slopes and intercepts shown above do NOT include any corrections or adjustments.

Streams may be combined, in which case capacity will be adjusted.

Values are shown for the first time segment only; they may differ for subsequent time segments.

Traffic Flows

Demand Set Data Options

Default Vehicle Mix	Vehicle Mix Varies Over Time	Vehicle Mix Varies Over Turn	Vehicle Mix Varies Over Entry	Vehicle Mix Source	PCU Factor for a HV (PCU)	Default Turning Proportions	Estimate from entry/exit counts	Turning Proportions Vary Over Time	Turning Proportions Vary Over Turn	Turning Proportions Vary Over Entry
		✓	✓	HV Percentages	2.00				✓	✓

Entry Flows

General Flows Data

Arm	Profile Type	Use Turning Counts	Average Demand Flow (PCU/hr)	Flow Scaling Factor (%)
A	ONE HOUR	✓	477.00	100.000
B	ONE HOUR	✓	210.00	100.000
C	ONE HOUR	✓	302.00	100.000

Turning Proportions

Turning Counts / Proportions (PCU/hr) - Junction 1 (for whole period)

		To		
		A	B	C
From	A	0.000	125.000	352.000
	B	207.000	0.000	3.000
	C	299.000	3.000	0.000

Turning Proportions (PCU) - Junction 1 (for whole period)

		To		
		A	B	C
From	A	0.00	0.26	0.74
	B	0.99	0.00	0.01
	C	0.99	0.01	0.00

Vehicle Mix

Average PCU Per Vehicle - Junction 1 (for whole period)

		To		
		A	B	C
From	A	1.000	1.000	1.000
	B	1.000	1.000	1.000
	C	1.000	1.000	1.000

Heavy Vehicle Percentages - Junction 1 (for whole period)

		To		
		A	B	C
From	A	0.0	0.0	0.0
	B	0.0	0.0	0.0
	C	0.0	0.0	0.0

Results

Results Summary for whole modelled period

Stream	Max RFC	Max Delay (s)	Max Queue (PCU)	Max LOS
B-AC	0.62	25.03	1.56	D
C-AB	0.01	5.14	0.01	A
C-A	-	-	-	-
A-B	-	-	-	-
A-C	-	-	-	-

Main Results for each time segment

Main results: (07:45-08:00)

Stream	Total Demand (PCU/hr)	Entry Flow (PCU/hr)	Pedestrian Demand (Ped/hr)	Capacity (PCU/hr)	RFC	End Queue (PCU)	Delay (s)	LOS
B-AC	158.10	155.75	0.00	420.45	0.376	0.59	13.485	B
C-AB	3.25	3.23	0.00	703.91	0.005	0.00	5.137	A
C-A	224.11	224.11	0.00	-	-	-	-	-
A-B	94.11	94.11	0.00	-	-	-	-	-
A-C	265.00	265.00	0.00	-	-	-	-	-

Main results: (08:00-08:15)

Stream	Total Demand (PCU/hr)	Entry Flow (PCU/hr)	Pedestrian Demand (Ped/hr)	Capacity (PCU/hr)	RFC	End Queue (PCU)	Delay (s)	LOS
B-AC	188.79	187.70	0.00	401.10	0.471	0.86	16.778	C
C-AB	4.18	4.18	0.00	719.24	0.006	0.01	5.034	A
C-A	267.31	267.31	0.00	-	-	-	-	-
A-B	112.37	112.37	0.00	-	-	-	-	-
A-C	316.44	316.44	0.00	-	-	-	-	-

Main results: (08:15-08:30)

Stream	Total Demand (PCU/hr)	Entry Flow (PCU/hr)	Pedestrian Demand (Ped/hr)	Capacity (PCU/hr)	RFC	End Queue (PCU)	Delay (s)	LOS
B-AC	231.21	228.60	0.00	374.34	0.618	1.51	24.255	C
C-AB	5.67	5.66	0.00	740.84	0.008	0.01	4.896	A
C-A	326.84	326.84	0.00	-	-	-	-	-
A-B	137.63	137.63	0.00	-	-	-	-	-
A-C	387.56	387.56	0.00	-	-	-	-	-

Main results: (08:30-08:45)

Stream	Total Demand (PCU/hr)	Entry Flow (PCU/hr)	Pedestrian Demand (Ped/hr)	Capacity (PCU/hr)	RFC	End Queue (PCU)	Delay (s)	LOS
B-AC	231.21	231.03	0.00	374.34	0.618	1.56	25.033	D
C-AB	5.67	5.67	0.00	740.84	0.008	0.01	4.896	A
C-A	326.84	326.84	0.00	-	-	-	-	-
A-B	137.63	137.63	0.00	-	-	-	-	-
A-C	387.56	387.56	0.00	-	-	-	-	-

Main results: (08:45-09:00)

Stream	Total Demand (PCU/hr)	Entry Flow (PCU/hr)	Pedestrian Demand (Ped/hr)	Capacity (PCU/hr)	RFC	End Queue (PCU)	Delay (s)	LOS
B-AC	188.79	191.35	0.00	401.09	0.471	0.92	17.365	C
C-AB	4.19	4.20	0.00	719.24	0.006	0.01	5.034	A
C-A	267.30	267.30	0.00	-	-	-	-	-
A-B	112.37	112.37	0.00	-	-	-	-	-
A-C	316.44	316.44	0.00	-	-	-	-	-

Main results: (09:00-09:15)

Stream	Total Demand (PCU/hr)	Entry Flow (PCU/hr)	Pedestrian Demand (Ped/hr)	Capacity (PCU/hr)	RFC	End Queue (PCU)	Delay (s)	LOS
B-AC	158.10	159.31	0.00	420.44	0.376	0.62	13.848	B
C-AB	3.26	3.27	0.00	703.92	0.005	0.00	5.139	A
C-A	224.10	224.10	0.00	-	-	-	-	-
A-B	94.11	94.11	0.00	-	-	-	-	-
A-C	265.00	265.00	0.00	-	-	-	-	-

2015 base + dev, PM

Data Errors and Warnings

No errors or warnings

Analysis Set Details

Name	Roundabout Capacity Model	Description	Locked	Network Flow Scaling Factor (%)	Reason For Scaling Factors
	N/A			100.000	

Demand Set Details

Name	Scenario Name	Time Period Name	Description	Traffic Profile Type	Model Start Time (HH:mm)	Model Finish Time (HH:mm)	Model Time Period Length (min)	Time Segment Length (min)	Single Time Segment Only	Locked
2015 base + dev, PM	2015 base + dev	PM		ONE HOUR	15:45	17:15	90	15		

Junction Network

Junctions

Junction	Name	Junction Type	Major Road Direction	Arm Order	Junction Delay (s)	Junction LOS
1	untitled	T-Junction	Two-way	A,B,C	17.55	C

Junction Network Options

Driving Side	Lighting
Left	Normal/unknown

Arms

Arms

Arm	Arm	Name	Description	Arm Type
A	A	Queens Drive (E)		Major
B	B	Aigburth Vale		Minor
C	C	Queens Drive (W)		Major

Major Arm Geometry

Arm	Width of carriageway (m)	Has kerbed central reserve	Width of kerbed central reserve (m)	Has right turn bay	Width For Right Turn (m)	Visibility For Right Turn (m)	Blocks?	Blocking Queue (PCU)
C	7.50		0.00		2.20	100.00	✓	0.00

Geometries for Arm C are measured opposite Arm B. Geometries for Arm A (if relevant) are measured opposite Arm D.

Minor Arm Geometry

Arm	Minor Arm Type	Lane Width (m)	Lane Width (Left) (m)	Lane Width (Right) (m)	Width at give-way (m)	Width at 5m (m)	Width at 10m (m)	Width at 15m (m)	Width at 20m (m)	Estimate Flare Length	Flare Length (PCU)	Visibility To Left (m)	Visibility To Right (m)
B	One lane	3.00										50	50

Slope / Intercept / Capacity

Priority Intersection Slopes and Intercepts

Junction	Stream	Intercept (PCU/hr)	Slope for A-B	Slope for A-C	Slope for C-A	Slope for C-B
1	B-A	518.507	0.088	0.223	0.140	0.319
1	B-C	655.413	0.094	0.237	-	-
1	C-B	631.874	0.229	0.229	-	-

The slopes and intercepts shown above do NOT include any corrections or adjustments.
Streams may be combined, in which case capacity will be adjusted.
Values are shown for the first time segment only; they may differ for subsequent time segments.

Traffic Flows

Demand Set Data Options

Default Vehicle Mix	Vehicle Mix Varies Over Time	Vehicle Mix Varies Over Turn	Vehicle Mix Varies Over Entry	Vehicle Mix Source	PCU Factor for a HV (PCU)	Default Turning Proportions	Estimate from entry/exit counts	Turning Proportions Vary Over Time	Turning Proportions Vary Over Turn	Turning Proportions Vary Over Entry
		✓	✓	HV Percentages	2.00				✓	✓

Entry Flows

General Flows Data

Arm	Profile Type	Use Turning Counts	Average Demand Flow (PCU/hr)	Flow Scaling Factor (%)
A	ONE HOUR	✓	483.00	100.000
B	ONE HOUR	✓	182.00	100.000
C	ONE HOUR	✓	256.00	100.000

Turning Proportions

Turning Counts / Proportions (PCU/hr) - Junction 1 (for whole period)

		To		
		A	B	C
From	A	0.000	154.000	329.000
	B	167.000	0.000	15.000
	C	242.000	14.000	0.000

Turning Proportions (PCU) - Junction 1 (for whole period)

		To		
		A	B	C
From	A	0.00	0.32	0.68
	B	0.92	0.00	0.08
	C	0.95	0.05	0.00

Vehicle Mix

Average PCU Per Vehicle - Junction 1 (for whole period)

		To		
		A	B	C
From	A	1.000	1.000	1.000
	B	1.000	1.000	1.000
	C	1.000	1.000	1.000

Heavy Vehicle Percentages - Junction 1 (for whole period)

		To		
		A	B	C
From	A	0.0	0.0	0.0
	B	0.0	0.0	0.0
	C	0.0	0.0	0.0

Results

Results Summary for whole modelled period

Stream	Max RFC	Max Delay (s)	Max Queue (PCU)	Max LOS
B-AC	0.51	18.91	1.03	C
C-AB	0.03	5.46	0.05	A
C-A	-	-	-	-
A-B	-	-	-	-
A-C	-	-	-	-

Main Results for each time segment

Main results: (15:45-16:00)

Stream	Total Demand (PCU/hr)	Entry Flow (PCU/hr)	Pedestrian Demand (Ped/hr)	Capacity (PCU/hr)	RFC	End Queue (PCU)	Delay (s)	LOS
B-AC	137.02	135.21	0.00	433.94	0.316	0.45	11.981	B
C-AB	14.26	14.16	0.00	674.15	0.021	0.03	5.454	A
C-A	178.47	178.47	0.00	-	-	-	-	-
A-B	115.94	115.94	0.00	-	-	-	-	-
A-C	247.69	247.69	0.00	-	-	-	-	-

Main results: (16:00-16:15)

Stream	Total Demand (PCU/hr)	Entry Flow (PCU/hr)	Pedestrian Demand (Ped/hr)	Capacity (PCU/hr)	RFC	End Queue (PCU)	Delay (s)	LOS
B-AC	163.61	162.89	0.00	415.68	0.394	0.63	14.197	B
C-AB	18.15	18.11	0.00	683.75	0.027	0.03	5.408	A
C-A	211.99	211.99	0.00	-	-	-	-	-
A-B	138.44	138.44	0.00	-	-	-	-	-
A-C	295.76	295.76	0.00	-	-	-	-	-

Main results: (16:15-16:30)

Stream	Total Demand (PCU/hr)	Entry Flow (PCU/hr)	Pedestrian Demand (Ped/hr)	Capacity (PCU/hr)	RFC	End Queue (PCU)	Delay (s)	LOS
B-AC	200.39	198.87	0.00	390.43	0.513	1.01	18.639	C
C-AB	24.25	24.19	0.00	697.56	0.035	0.05	5.346	A
C-A	257.61	257.61	0.00	-	-	-	-	-
A-B	169.56	169.56	0.00	-	-	-	-	-
A-C	362.24	362.24	0.00	-	-	-	-	-

Main results: (16:30-16:45)

Stream	Total Demand (PCU/hr)	Entry Flow (PCU/hr)	Pedestrian Demand (Ped/hr)	Capacity (PCU/hr)	RFC	End Queue (PCU)	Delay (s)	LOS
B-AC	200.39	200.31	0.00	390.42	0.513	1.03	18.914	C
C-AB	24.26	24.26	0.00	697.57	0.035	0.05	5.346	A
C-A	257.60	257.60	0.00	-	-	-	-	-
A-B	169.56	169.56	0.00	-	-	-	-	-
A-C	362.24	362.24	0.00	-	-	-	-	-

Main results: (16:45-17:00)

Stream	Total Demand (PCU/hr)	Entry Flow (PCU/hr)	Pedestrian Demand (Ped/hr)	Capacity (PCU/hr)	RFC	End Queue (PCU)	Delay (s)	LOS
B-AC	163.61	165.08	0.00	415.66	0.394	0.67	14.449	B
C-AB	18.17	18.22	0.00	683.78	0.027	0.03	5.411	A
C-A	211.97	211.97	0.00	-	-	-	-	-
A-B	138.44	138.44	0.00	-	-	-	-	-
A-C	295.76	295.76	0.00	-	-	-	-	-

Main results: (17:00-17:15)

Stream	Total Demand (PCU/hr)	Entry Flow (PCU/hr)	Pedestrian Demand (Ped/hr)	Capacity (PCU/hr)	RFC	End Queue (PCU)	Delay (s)	LOS
B-AC	137.02	137.80	0.00	433.91	0.316	0.47	12.189	B
C-AB	14.29	14.33	0.00	674.18	0.021	0.03	5.457	A
C-A	178.44	178.44	0.00	-	-	-	-	-
A-B	115.94	115.94	0.00	-	-	-	-	-
A-C	247.69	247.69	0.00	-	-	-	-	-

2020 base + dev, AM

Data Errors and Warnings

No errors or warnings

Analysis Set Details

Name	Roundabout Capacity Model	Description	Locked	Network Flow Scaling Factor (%)	Reason For Scaling Factors
	N/A			100.000	

Demand Set Details

Name	Scenario Name	Time Period Name	Description	Traffic Profile Type	Model Start Time (HH:mm)	Model Finish Time (HH:mm)	Model Time Period Length (min)	Time Segment Length (min)	Single Time Segment Only	Locked
2020 base + dev, AM	2020 base + dev	AM		ONE HOUR	07:45	09:15	90	15		

Junction Network

Junctions

Junction	Name	Junction Type	Major Road Direction	Arm Order	Junction Delay (s)	Junction LOS
1	untitled	T-Junction	Two-way	A,B,C	30.22	D

Junction Network Options

Driving Side	Lighting
Left	Normal/unknown

Arms

Arms

Arm	Arm	Name	Description	Arm Type
A	A	Queens Drive (E)		Major
B	B	Aigburth Vale		Minor
C	C	Queens Drive (W)		Major

Major Arm Geometry

Arm	Width of carriageway (m)	Has kerbed central reserve	Width of kerbed central reserve (m)	Has right turn bay	Width For Right Turn (m)	Visibility For Right Turn (m)	Blocks?	Blocking Queue (PCU)
C	7.50		0.00		2.20	100.00	✓	0.00

Geometries for Arm C are measured opposite Arm B. Geometries for Arm A (if relevant) are measured opposite Arm D.

Minor Arm Geometry

Arm	Minor Arm Type	Lane Width (m)	Lane Width (Left) (m)	Lane Width (Right) (m)	Width at give-way (m)	Width at 5m (m)	Width at 10m (m)	Width at 15m (m)	Width at 20m (m)	Estimate Flare Length	Flare Length (PCU)	Visibility To Left (m)	Visibility To Right (m)
B	One lane	3.00										50	50

Slope / Intercept / Capacity

Priority Intersection Slopes and Intercepts

Junction	Stream	Intercept (PCU/hr)	Slope for A-B	Slope for A-C	Slope for C-A	Slope for C-B
1	B-A	518.507	0.088	0.223	0.140	0.319
1	B-C	655.413	0.094	0.237	-	-
1	C-B	631.874	0.229	0.229	-	-

The slopes and intercepts shown above do NOT include any corrections or adjustments.

Streams may be combined, in which case capacity will be adjusted.

Values are shown for the first time segment only; they may differ for subsequent time segments.

Traffic Flows

Demand Set Data Options

Default Vehicle Mix	Vehicle Mix Varies Over Time	Vehicle Mix Varies Over Turn	Vehicle Mix Varies Over Entry	Vehicle Mix Source	PCU Factor for a HV (PCU)	Default Turning Proportions	Estimate from entry/exit counts	Turning Proportions Vary Over Time	Turning Proportions Vary Over Turn	Turning Proportions Vary Over Entry
		✓	✓	HV Percentages	2.00				✓	✓

Entry Flows

General Flows Data

Arm	Profile Type	Use Turning Counts	Average Demand Flow (PCU/hr)	Flow Scaling Factor (%)
A	ONE HOUR	✓	513.00	100.000
B	ONE HOUR	✓	225.00	100.000
C	ONE HOUR	✓	324.00	100.000

Turning Proportions

Turning Counts / Proportions (PCU/hr) - Junction 1 (for whole period)

		To		
		A	B	C
From	A	0.000	135.000	378.000
	B	222.000	0.000	3.000
	C	321.000	3.000	0.000

Turning Proportions (PCU) - Junction 1 (for whole period)

		To		
		A	B	C
From	A	0.00	0.26	0.74
	B	0.99	0.00	0.01
	C	0.99	0.01	0.00

Vehicle Mix

Average PCU Per Vehicle - Junction 1 (for whole period)

		To		
		A	B	C
From	A	1.000	1.000	1.000
	B	1.000	1.000	1.000
	C	1.000	1.000	1.000

Heavy Vehicle Percentages - Junction 1 (for whole period)

		To		
		A	B	C
From	A	0.0	0.0	0.0
	B	0.0	0.0	0.0
	C	0.0	0.0	0.0

Results

Results Summary for whole modelled period

Stream	Max RFC	Max Delay (s)	Max Queue (PCU)	Max LOS
B-AC	0.68	30.77	2.04	D
C-AB	0.01	5.10	0.01	A
C-A	-	-	-	-
A-B	-	-	-	-
A-C	-	-	-	-

Main Results for each time segment

Main results: (07:45-08:00)

Stream	Total Demand (PCU/hr)	Entry Flow (PCU/hr)	Pedestrian Demand (Ped/hr)	Capacity (PCU/hr)	RFC	End Queue (PCU)	Delay (s)	LOS
B-AC	169.39	166.68	0.00	412.98	0.410	0.68	14.466	B
C-AB	3.34	3.32	0.00	709.55	0.005	0.00	5.097	A
C-A	240.58	240.58	0.00	-	-	-	-	-
A-B	101.64	101.64	0.00	-	-	-	-	-
A-C	284.58	284.58	0.00	-	-	-	-	-

Main results: (08:00-08:15)

Stream	Total Demand (PCU/hr)	Entry Flow (PCU/hr)	Pedestrian Demand (Ped/hr)	Capacity (PCU/hr)	RFC	End Queue (PCU)	Delay (s)	LOS
B-AC	202.27	200.88	0.00	392.20	0.516	1.02	18.680	C
C-AB	4.32	4.32	0.00	726.11	0.006	0.01	4.987	A
C-A	286.94	286.94	0.00	-	-	-	-	-
A-B	121.36	121.36	0.00	-	-	-	-	-
A-C	339.81	339.81	0.00	-	-	-	-	-

Main results: (08:15-08:30)

Stream	Total Demand (PCU/hr)	Entry Flow (PCU/hr)	Pedestrian Demand (Ped/hr)	Capacity (PCU/hr)	RFC	End Queue (PCU)	Delay (s)	LOS
B-AC	247.73	244.01	0.00	363.47	0.682	1.95	29.231	D
C-AB	5.90	5.90	0.00	749.41	0.008	0.01	4.841	A
C-A	350.83	350.83	0.00	-	-	-	-	-
A-B	148.64	148.64	0.00	-	-	-	-	-
A-C	416.19	416.19	0.00	-	-	-	-	-

Main results: (08:30-08:45)

Stream	Total Demand (PCU/hr)	Entry Flow (PCU/hr)	Pedestrian Demand (Ped/hr)	Capacity (PCU/hr)	RFC	End Queue (PCU)	Delay (s)	LOS
B-AC	247.73	247.39	0.00	363.47	0.682	2.04	30.771	D
C-AB	5.91	5.91	0.00	749.41	0.008	0.01	4.843	A
C-A	350.82	350.82	0.00	-	-	-	-	-
A-B	148.64	148.64	0.00	-	-	-	-	-
A-C	416.19	416.19	0.00	-	-	-	-	-

Main results: (08:45-09:00)

Stream	Total Demand (PCU/hr)	Entry Flow (PCU/hr)	Pedestrian Demand (Ped/hr)	Capacity (PCU/hr)	RFC	End Queue (PCU)	Delay (s)	LOS
B-AC	202.27	205.98	0.00	392.20	0.516	1.11	19.695	C
C-AB	4.33	4.34	0.00	726.11	0.006	0.01	4.987	A
C-A	286.94	286.94	0.00	-	-	-	-	-
A-B	121.36	121.36	0.00	-	-	-	-	-
A-C	339.81	339.81	0.00	-	-	-	-	-

Main results: (09:00-09:15)

Stream	Total Demand (PCU/hr)	Entry Flow (PCU/hr)	Pedestrian Demand (Ped/hr)	Capacity (PCU/hr)	RFC	End Queue (PCU)	Delay (s)	LOS
B-AC	169.39	170.97	0.00	412.98	0.410	0.71	14.970	B
C-AB	3.35	3.36	0.00	709.56	0.005	0.00	5.097	A
C-A	240.57	240.57	0.00	-	-	-	-	-
A-B	101.64	101.64	0.00	-	-	-	-	-
A-C	284.58	284.58	0.00	-	-	-	-	-

2020 base + dev, PM

Data Errors and Warnings

No errors or warnings

Analysis Set Details

Name	Roundabout Capacity Model	Description	Locked	Network Flow Scaling Factor (%)	Reason For Scaling Factors
	N/A			100.000	

Demand Set Details

Name	Scenario Name	Time Period Name	Description	Traffic Profile Type	Model Start Time (HH:mm)	Model Finish Time (HH:mm)	Model Time Period Length (min)	Time Segment Length (min)	Single Time Segment Only	Locked
2020 base + dev, PM	2020 base + dev	PM		ONE HOUR	15:45	17:15	90	15		

Junction Network

Junctions

Junction	Name	Junction Type	Major Road Direction	Arm Order	Junction Delay (s)	Junction LOS
1	untitled	T-Junction	Two-way	A,B,C	19.98	C

Junction Network Options

Driving Side	Lighting
Left	Normal/unknown

Arms

Arms

Arm	Arm	Name	Description	Arm Type
A	A	Queens Drive (E)		Major
B	B	Aigburth Vale		Minor
C	C	Queens Drive (W)		Major

Major Arm Geometry

Arm	Width of carriageway (m)	Has kerbed central reserve	Width of kerbed central reserve (m)	Has right turn bay	Width For Right Turn (m)	Visibility For Right Turn (m)	Blocks?	Blocking Queue (PCU)
C	7.50		0.00		2.20	100.00	✓	0.00

Geometries for Arm C are measured opposite Arm B. Geometries for Arm A (if relevant) are measured opposite Arm D.

Minor Arm Geometry

Arm	Minor Arm Type	Lane Width (m)	Lane Width (Left) (m)	Lane Width (Right) (m)	Width at give-way (m)	Width at 5m (m)	Width at 10m (m)	Width at 15m (m)	Width at 20m (m)	Estimate Flare Length	Flare Length (PCU)	Visibility To Left (m)	Visibility To Right (m)
B	One lane	3.00										50	50

Slope / Intercept / Capacity

Priority Intersection Slopes and Intercepts

Junction	Stream	Intercept (PCU/hr)	Slope for A-B	Slope for A-C	Slope for C-A	Slope for C-B
1	B-A	518.507	0.088	0.223	0.140	0.319
1	B-C	655.413	0.094	0.237	-	-
1	C-B	631.874	0.229	0.229	-	-

The slopes and intercepts shown above do NOT include any corrections or adjustments.

Streams may be combined, in which case capacity will be adjusted.

Values are shown for the first time segment only; they may differ for subsequent time segments.

Traffic Flows

Demand Set Data Options

Default Vehicle Mix	Vehicle Mix Varies Over Time	Vehicle Mix Varies Over Turn	Vehicle Mix Varies Over Entry	Vehicle Mix Source	PCU Factor for a HV (PCU)	Default Turning Proportions	Estimate from entry/exit counts	Turning Proportions Vary Over Time	Turning Proportions Vary Over Turn	Turning Proportions Vary Over Entry
		✓	✓	HV Percentages	2.00				✓	✓

Entry Flows

General Flows Data

Arm	Profile Type	Use Turning Counts	Average Demand Flow (PCU/hr)	Flow Scaling Factor (%)
A	ONE HOUR	✓	518.00	100.000
B	ONE HOUR	✓	195.00	100.000
C	ONE HOUR	✓	275.00	100.000

Turning Proportions

Turning Counts / Proportions (PCU/hr) - Junction 1 (for whole period)

		To		
		A	B	C
From	A	0.000	165.000	353.000
	B	179.000	0.000	16.000
	C	260.000	15.000	0.000

Turning Proportions (PCU) - Junction 1 (for whole period)

		To		
		A	B	C
From	A	0.00	0.32	0.68
	B	0.92	0.00	0.08
	C	0.95	0.05	0.00

Vehicle Mix

Average PCU Per Vehicle - Junction 1 (for whole period)

		To		
		A	B	C
From	A	1.000	1.000	1.000
	B	1.000	1.000	1.000
	C	1.000	1.000	1.000

Heavy Vehicle Percentages - Junction 1 (for whole period)

		To		
		A	B	C
From	A	0.0	0.0	0.0
	B	0.0	0.0	0.0
	C	0.0	0.0	0.0

Results

Results Summary for whole modelled period

Stream	Max RFC	Max Delay (s)	Max Queue (PCU)	Max LOS
B-AC	0.56	21.68	1.26	C
C-AB	0.04	5.44	0.05	A
C-A	-	-	-	-
A-B	-	-	-	-
A-C	-	-	-	-

Main Results for each time segment

Main results: (15:45-16:00)

Stream	Total Demand (PCU/hr)	Entry Flow (PCU/hr)	Pedestrian Demand (Ped/hr)	Capacity (PCU/hr)	RFC	End Queue (PCU)	Delay (s)	LOS
B-AC	146.81	144.75	0.00	427.03	0.344	0.51	12.665	B
C-AB	15.64	15.53	0.00	677.92	0.023	0.03	5.435	A
C-A	191.39	191.39	0.00	-	-	-	-	-
A-B	124.22	124.22	0.00	-	-	-	-	-
A-C	265.76	265.76	0.00	-	-	-	-	-

Main results: (16:00-16:15)

Stream	Total Demand (PCU/hr)	Entry Flow (PCU/hr)	Pedestrian Demand (Ped/hr)	Capacity (PCU/hr)	RFC	End Queue (PCU)	Delay (s)	LOS
B-AC	175.30	174.41	0.00	407.43	0.430	0.73	15.375	C
C-AB	20.01	19.97	0.00	688.42	0.029	0.04	5.385	A
C-A	227.21	227.21	0.00	-	-	-	-	-
A-B	148.33	148.33	0.00	-	-	-	-	-
A-C	317.34	317.34	0.00	-	-	-	-	-

Main results: (16:15-16:30)

Stream	Total Demand (PCU/hr)	Entry Flow (PCU/hr)	Pedestrian Demand (Ped/hr)	Capacity (PCU/hr)	RFC	End Queue (PCU)	Delay (s)	LOS
B-AC	214.70	212.70	0.00	380.31	0.565	1.23	21.219	C
C-AB	26.92	26.86	0.00	703.51	0.038	0.05	5.320	A
C-A	275.86	275.86	0.00	-	-	-	-	-
A-B	181.67	181.67	0.00	-	-	-	-	-
A-C	388.66	388.66	0.00	-	-	-	-	-

Main results: (16:30-16:45)

Stream	Total Demand (PCU/hr)	Entry Flow (PCU/hr)	Pedestrian Demand (Ped/hr)	Capacity (PCU/hr)	RFC	End Queue (PCU)	Delay (s)	LOS
B-AC	214.70	214.58	0.00	380.30	0.565	1.26	21.676	C
C-AB	26.94	26.94	0.00	703.53	0.038	0.05	5.321	A
C-A	275.84	275.84	0.00	-	-	-	-	-
A-B	181.67	181.67	0.00	-	-	-	-	-
A-C	388.66	388.66	0.00	-	-	-	-	-

Main results: (16:45-17:00)

Stream	Total Demand (PCU/hr)	Entry Flow (PCU/hr)	Pedestrian Demand (Ped/hr)	Capacity (PCU/hr)	RFC	End Queue (PCU)	Delay (s)	LOS
B-AC	175.30	177.24	0.00	407.41	0.430	0.78	15.771	C
C-AB	20.03	20.09	0.00	688.45	0.029	0.04	5.386	A
C-A	227.19	227.19	0.00	-	-	-	-	-
A-B	148.33	148.33	0.00	-	-	-	-	-
A-C	317.34	317.34	0.00	-	-	-	-	-

Main results: (17:00-17:15)

Stream	Total Demand (PCU/hr)	Entry Flow (PCU/hr)	Pedestrian Demand (Ped/hr)	Capacity (PCU/hr)	RFC	End Queue (PCU)	Delay (s)	LOS
B-AC	146.81	147.77	0.00	426.99	0.344	0.53	12.937	B
C-AB	15.68	15.72	0.00	677.95	0.023	0.03	5.436	A
C-A	191.35	191.35	0.00	-	-	-	-	-
A-B	124.22	124.22	0.00	-	-	-	-	-
A-C	265.76	265.76	0.00	-	-	-	-	-

S|C|P

APPENDIX 9

Junctions 8

PICADY 8 - Priority Intersection Module

Version: 8.0.4.487 [15039,24/03/2014]
© Copyright TRL Limited, 2014

For sales and distribution information, program advice and maintenance, contact TRL:
Tel: +44 (0)1344 770758 email: software@trl.co.uk Web: http://www.trlsoftware.co.uk

The users of this computer program for the solution of an engineering problem are in no way relieved of their responsibility for the correctness of the solution

Filename: PICADY - Park Avenue_Aigburth Vale.arc8
Path: Z:\Job Library\2014\14197 - Park Avenue, Sefton Park, Liverpool\Traffic Data
Report generation date: 26/08/2014 14:14:04

» Existing Layout - 2015 base + dev, AM
» Existing Layout - 2015 base + dev, PM
» Existing Layout - 2020 base + dev, AM
» Existing Layout - 2020 base + dev, PM

Summary of junction performance

	AM			PM		
	Queue (PCU)	Delay (s)	RFC	Queue (PCU)	Delay (s)	RFC
	Existing Layout - 2015 base + dev					
Stream B-ACD	0.08	8.46	0.08	0.06	8.47	0.06
Stream A-BCD	0.05	5.09	0.04	0.03	5.29	0.03
Stream A-B	-	-	-	-	-	-
Stream A-C	-	-	-	-	-	-
Stream D-ABC	0.32	9.79	0.24	0.10	7.78	0.09
Stream C-ABD	0.00	5.58	0.00	0.01	5.31	0.01
Stream C-D	-	-	-	-	-	-
Stream C-A	-	-	-	-	-	-
	Existing Layout - 2020 base + dev					
Stream B-ACD	0.09	8.62	0.08	0.07	8.62	0.06
Stream A-BCD	0.06	5.04	0.04	0.04	5.26	0.03
Stream A-B	-	-	-	-	-	-
Stream A-C	-	-	-	-	-	-
Stream D-ABC	0.35	10.18	0.26	0.11	7.94	0.10
Stream C-ABD	0.00	5.57	0.00	0.01	5.28	0.01
Stream C-D	-	-	-	-	-	-
Stream C-A	-	-	-	-	-	-

Values shown are the maximum values over all time segments. Delay is the maximum value of average delay per arriving vehicle.

"D1 - 2015 base + dev, AM " model duration: 07:45 - 09:15
"D2 - 2015 base + dev, PM" model duration: 15:45 - 17:15
"D3 - 2020 base + dev, AM" model duration: 07:45 - 09:15
"D4 - 2020 base + dev, PM" model duration: 15:45 - 17:15

Run using Junctions 8.0.4.487 at 26/08/2014 14:14:02

File summary

Title	Park Avenue_Aigburth Vale Assessment
Location	Liverpool
Site Number	
Date	11/07/2014
Version	
Status	(new file)
Identifier	
Client	
Jobnumber	
Enumerator	NS
Description	

Analysis Options

Vehicle Length (m)	Do Queue Variations	Calculate Residual Capacity	Residual Capacity Criteria Type	RFC Threshold	Average Delay Threshold (s)	Queue Threshold (PCU)
5.75			N/A	0.85	36.00	20.00

Units

Distance Units	Speed Units	Traffic Units Input	Traffic Units Results	Flow Units	Average Delay Units	Total Delay Units	Rate Of Delay Units
m	kph	PCU	PCU	perHour	s	-Min	perMin

Existing Layout - 2015 base + dev, AM

Data Errors and Warnings

No errors or warnings

Analysis Set Details

Name	Roundabout Capacity Model	Description	Locked	Network Flow Scaling Factor (%)	Reason For Scaling Factors
Existing Layout	N/A			100.000	

Demand Set Details

Name	Scenario Name	Time Period Name	Description	Traffic Profile Type	Model Start Time (HH:mm)	Model Finish Time (HH:mm)	Model Time Period Length (min)	Time Segment Length (min)	Single Time Segment Only	Locked
2015 base + dev, AM	2015 base + dev	AM		ONE HOUR	07:45	09:15	90	15		

Junction Network

Junctions

Junction	Name	Junction Type	Major Road Direction	Arm Order	Junction Delay (s)	Junction LOS
1	(untitled)	Crossroads	Two-way	A,B,C,D	8.75	A

Junction Network Options

Driving Side	Lighting
Left	Normal/unknown

Arms

Arms

Arm	Arm	Name	Description	Arm Type
A	A	Aigburth Vale (S)		Major
B	B	Park Avenue (W)		Minor
C	C	Aigburth Vale (N)		Major
D	D	Park Avenue (E)		Minor

Major Arm Geometry

Arm	Width of carriageway (m)	Has kerbed central reserve	Width of kerbed central reserve (m)	Has right turn bay	Width For Right Turn (m)	Visibility For Right Turn (m)	Blocks?	Blocking Queue (PCU)
A	6.00		0.00		2.20	100.00	✓	0.00
C	6.00		0.00		2.20	100.00	✓	0.00

Geometries for Arm C are measured opposite Arm B. Geometries for Arm A (if relevant) are measured opposite Arm D.

Minor Arm Geometry

Arm	Minor Arm Type	Lane Width (m)	Lane Width (Left) (m)	Lane Width (Right) (m)	Width at give-way (m)	Width at 5m (m)	Width at 10m (m)	Width at 15m (m)	Width at 20m (m)	Estimate Flare Length	Flare Length (PCU)	Visibility To Left (m)	Visibility To Right (m)
B	One lane	3.00										65	55
D	One lane	3.00										30	90

Slope / Intercept / Capacity

Priority Intersection Slopes and Intercepts

Junction	Stream	Intercept (PCU/hr)	Slope for A-B	Slope for A-C	Slope for A-D	Slope for B-A	Slope for B-C	Slope for B-D	Slope for C-A	Slope for C-B	Slope for C-D	Slope for D-A	Slope for D-B	Slope for D-C
1	A-D	631.874	-	-	-	-	-	-	0.245	0.350	0.245	-	-	-
1	B-A	525.985	0.096	0.242	0.242	-	-	-	0.152	0.346	-	0.242	0.242	0.121
1	B-C	658.561	0.101	0.255	-	-	-	-	-	-	-	-	-	-
1	B-D, nearside lane	525.985	0.096	0.242	0.242	-	-	-	0.152	0.346	0.152	-	-	-
1	B-D, offside lane	525.985	0.096	0.242	0.242	-	-	-	0.152	0.346	0.152	-	-	-
1	C-B	631.874	0.245	0.245	0.350	-	-	-	-	-	-	-	-	-
1	D-A	680.595	-	-	-	-	-	-	0.264	-	0.104	-	-	-
1	D-B, nearside lane	531.554	0.154	0.154	0.350	-	-	-	0.245	0.245	0.097	-	-	-
1	D-B, offside lane	531.554	0.154	0.154	0.350	-	-	-	0.245	0.245	0.097	-	-	-
1	D-C	531.554	-	0.154	0.350	0.122	0.245	0.245	0.245	0.245	0.097	-	-	-

The slopes and intercepts shown above do NOT include any corrections or adjustments.

Streams may be combined, in which case capacity will be adjusted.

Values are shown for the first time segment only; they may differ for subsequent time segments.

Traffic Flows

Demand Set Data Options

Default Vehicle Mix	Vehicle Mix Varies Over Time	Vehicle Mix Varies Over Turn	Vehicle Mix Varies Over Entry	Vehicle Mix Source	PCU Factor for a HV (PCU)	Default Turning Proportions	Estimate from entry/exit counts	Turning Proportions Vary Over Time	Turning Proportions Vary Over Turn	Turning Proportions Vary Over Entry
		✓	✓	HV Percentages	2.00				✓	✓

Entry Flows

General Flows Data

Arm	Profile Type	Use Turning Counts	Average Demand Flow (PCU/hr)	Flow Scaling Factor (%)
A	ONE HOUR	✓	256.00	100.000
B	ONE HOUR	✓	32.00	100.000
C	ONE HOUR	✓	128.00	100.000
D	ONE HOUR	✓	106.00	100.000

Turning Proportions

Turning Counts / Proportions (PCU/hr) - Junction 1 (for whole period)

		To			
		A	B	C	D
From	A	0.000	55.000	183.000	18.000
	B	7.000	0.000	6.000	19.000
	C	126.000	2.000	0.000	0.000
	D	25.000	62.000	19.000	0.000

Turning Proportions (PCU) - Junction 1 (for whole period)

		To			
		A	B	C	D
From	A	0.00	0.21	0.71	0.07
	B	0.22	0.00	0.19	0.59
	C	0.98	0.02	0.00	0.00
	D	0.24	0.58	0.18	0.00

Vehicle Mix

Average PCU Per Vehicle - Junction 1 (for whole period)

		To			
		A	B	C	D
From	A	1.000	1.000	1.000	1.000
	B	1.000	1.000	1.000	1.000
	C	1.000	1.000	1.000	1.000
	D	1.000	1.000	1.000	1.000

Heavy Vehicle Percentages - Junction 1 (for whole period)

		To			
		A	B	C	D
From	A	0.0	0.0	0.0	0.0
	B	0.0	0.0	0.0	0.0
	C	0.0	0.0	0.0	0.0
	D	0.0	0.0	0.0	0.0

Results

Results Summary for whole modelled period

Stream	Max RFC	Max Delay (s)	Max Queue (PCU)	Max LOS
B-ACD	0.08	8.46	0.08	A
A-BCD	0.04	5.09	0.05	A
A-B	-	-	-	-
A-C	-	-	-	-
D-ABC	0.24	9.79	0.32	A
C-ABD	0.00	5.58	0.00	A
C-D	-	-	-	-
C-A	-	-	-	-

Main Results for each time segment

Main results: (07:45-08:00)

Stream	Total Demand (PCU/hr)	Entry Flow (PCU/hr)	Pedestrian Demand (Ped/hr)	Capacity (PCU/hr)	RFC	End Queue (PCU)	Delay (s)	LOS
B-ACD	24.09	23.89	0.00	488.26	0.049	0.05	7.749	A
A-BCD	17.78	17.66	0.00	725.71	0.025	0.03	5.084	A
A-B	40.43	40.43	0.00	-	-	-	-	-
A-C	134.52	134.52	0.00	-	-	-	-	-
D-ABC	79.80	79.07	0.00	508.80	0.157	0.18	8.363	A
C-ABD	1.76	1.75	0.00	647.22	0.003	0.00	5.576	A
C-D	0.00	0.00	0.00	-	-	-	-	-
C-A	94.61	94.61	0.00	-	-	-	-	-

Main results: (08:00-08:15)

Stream	Total Demand (PCU/hr)	Entry Flow (PCU/hr)	Pedestrian Demand (Ped/hr)	Capacity (PCU/hr)	RFC	End Queue (PCU)	Delay (s)	LOS
B-ACD	28.77	28.72	0.00	476.77	0.060	0.06	8.033	A
A-BCD	22.35	22.32	0.00	743.98	0.030	0.04	4.988	A
A-B	48.02	48.02	0.00	-	-	-	-	-
A-C	159.77	159.77	0.00	-	-	-	-	-
D-ABC	95.29	95.09	0.00	498.62	0.191	0.23	8.916	A
C-ABD	2.17	2.17	0.00	650.67	0.003	0.00	5.550	A
C-D	0.00	0.00	0.00	-	-	-	-	-
C-A	112.90	112.90	0.00	-	-	-	-	-

Main results: (08:15-08:30)

Stream	Total Demand (PCU/hr)	Entry Flow (PCU/hr)	Pedestrian Demand (Ped/hr)	Capacity (PCU/hr)	RFC	End Queue (PCU)	Delay (s)	LOS
B-ACD	35.23	35.16	0.00	460.90	0.076	0.08	8.455	A
A-BCD	29.29	29.24	0.00	769.09	0.038	0.05	4.865	A
A-B	58.37	58.37	0.00	-	-	-	-	-
A-C	194.20	194.20	0.00	-	-	-	-	-
D-ABC	116.71	116.39	0.00	484.52	0.241	0.31	9.769	A
C-ABD	2.78	2.77	0.00	655.73	0.004	0.00	5.512	A
C-D	0.00	0.00	0.00	-	-	-	-	-
C-A	138.15	138.15	0.00	-	-	-	-	-

Main results: (08:30-08:45)

Stream	Total Demand (PCU/hr)	Entry Flow (PCU/hr)	Pedestrian Demand (Ped/hr)	Capacity (PCU/hr)	RFC	End Queue (PCU)	Delay (s)	LOS
B-ACD	35.23	35.23	0.00	460.87	0.076	0.08	8.457	A
A-BCD	29.31	29.31	0.00	769.11	0.038	0.05	4.868	A
A-B	58.36	58.36	0.00	-	-	-	-	-
A-C	194.19	194.19	0.00	-	-	-	-	-
D-ABC	116.71	116.70	0.00	484.51	0.241	0.32	9.787	A
C-ABD	2.78	2.78	0.00	655.71	0.004	0.00	5.512	A
C-D	0.00	0.00	0.00	-	-	-	-	-
C-A	138.15	138.15	0.00	-	-	-	-	-

Main results: (08:45-09:00)

Stream	Total Demand (PCU/hr)	Entry Flow (PCU/hr)	Pedestrian Demand (Ped/hr)	Capacity (PCU/hr)	RFC	End Queue (PCU)	Delay (s)	LOS
B-ACD	28.77	28.84	0.00	476.71	0.060	0.06	8.040	A
A-BCD	22.37	22.43	0.00	744.00	0.030	0.04	4.989	A
A-B	48.01	48.01	0.00	-	-	-	-	-
A-C	159.75	159.75	0.00	-	-	-	-	-
D-ABC	95.29	95.60	0.00	498.59	0.191	0.24	8.939	A
C-ABD	2.17	2.17	0.00	650.65	0.003	0.00	5.550	A
C-D	0.00	0.00	0.00	-	-	-	-	-
C-A	112.90	112.90	0.00	-	-	-	-	-

Main results: (09:00-09:15)

Stream	Total Demand (PCU/hr)	Entry Flow (PCU/hr)	Pedestrian Demand (Ped/hr)	Capacity (PCU/hr)	RFC	End Queue (PCU)	Delay (s)	LOS
B-ACD	24.09	24.14	0.00	488.17	0.049	0.05	7.760	A
A-BCD	17.82	17.85	0.00	725.73	0.025	0.03	5.085	A
A-B	40.42	40.42	0.00	-	-	-	-	-
A-C	134.49	134.49	0.00	-	-	-	-	-
D-ABC	79.80	80.01	0.00	508.75	0.157	0.19	8.402	A
C-ABD	1.76	1.76	0.00	647.17	0.003	0.00	5.579	A
C-D	0.00	0.00	0.00	-	-	-	-	-
C-A	94.60	94.60	0.00	-	-	-	-	-

Existing Layout - 2015 base + dev, PM

Data Errors and Warnings

No errors or warnings

Analysis Set Details

Name	Roundabout Capacity Model	Description	Locked	Network Flow Scaling Factor (%)	Reason For Scaling Factors
Existing Layout	N/A			100.000	

Demand Set Details

Name	Scenario Name	Time Period Name	Description	Traffic Profile Type	Model Start Time (HH:mm)	Model Finish Time (HH:mm)	Model Time Period Length (min)	Time Segment Length (min)	Single Time Segment Only	Locked
2015 base + dev, PM	2015 base + dev	PM		ONE HOUR	15:45	17:15	90	15		

Junction Network

Junctions

Junction	Name	Junction Type	Major Road Direction	Arm Order	Junction Delay (s)	Junction LOS
1	(untitled)	Crossroads	Two-way	A,B,C,D	7.41	A

Junction Network Options

Driving Side	Lighting
Left	Normal/unknown

Arms

Arms

Arm	Arm	Name	Description	Arm Type
A	A	Aigburth Vale (S)		Major
B	B	Park Avenue (W)		Minor
C	C	Aigburth Vale (N)		Major
D	D	Park Avenue (E)		Minor

Major Arm Geometry

Arm	Width of carriageway (m)	Has kerbed central reserve	Width of kerbed central reserve (m)	Has right turn bay	Width For Right Turn (m)	Visibility For Right Turn (m)	Blocks?	Blocking Queue (PCU)
A	6.00		0.00		2.20	100.00	✓	0.00
C	6.00		0.00		2.20	100.00	✓	0.00

Geometries for Arm C are measured opposite Arm B. Geometries for Arm A (if relevant) are measured opposite Arm D.

Minor Arm Geometry

Arm	Minor Arm Type	Lane Width (m)	Lane Width (Left) (m)	Lane Width (Right) (m)	Width at give-way (m)	Width at 5m (m)	Width at 10m (m)	Width at 15m (m)	Width at 20m (m)	Estimate Flare Length	Flare Length (PCU)	Visibility To Left (m)	Visibility To Right (m)
B	One lane	3.00										65	55
D	One lane	3.00										30	90

Slope / Intercept / Capacity

Priority Intersection Slopes and Intercepts

Junction	Stream	Intercept (PCU/hr)	Slope for A-B	Slope for A-C	Slope for A-D	Slope for B-A	Slope for B-C	Slope for B-D	Slope for C-A	Slope for C-B	Slope for C-D	Slope for D-A	Slope for D-B	Slope for D-C
1	A-D	631.874	-	-	-	-	-	-	0.245	0.350	0.245	-	-	-
1	B-A	525.985	0.096	0.242	0.242	-	-	-	0.152	0.346	-	0.242	0.242	0.121
1	B-C	658.561	0.101	0.255	-	-	-	-	-	-	-	-	-	-
1	B-D, nearside lane	525.985	0.096	0.242	0.242	-	-	-	0.152	0.346	0.152	-	-	-
1	B-D, offside lane	525.985	0.096	0.242	0.242	-	-	-	0.152	0.346	0.152	-	-	-
1	C-B	631.874	0.245	0.245	0.350	-	-	-	-	-	-	-	-	-
1	D-A	680.595	-	-	-	-	-	-	0.264	-	0.104	-	-	-
1	D-B, nearside lane	531.554	0.154	0.154	0.350	-	-	-	0.245	0.245	0.097	-	-	-
1	D-B, offside lane	531.554	0.154	0.154	0.350	-	-	-	0.245	0.245	0.097	-	-	-
1	D-C	531.554	-	0.154	0.350	0.122	0.245	0.245	0.245	0.245	0.097	-	-	-

The slopes and intercepts shown above do NOT include any corrections or adjustments.

Streams may be combined, in which case capacity will be adjusted.

Values are shown for the first time segment only; they may differ for subsequent time segments.

Traffic Flows

Demand Set Data Options

Default Vehicle Mix	Vehicle Mix Varies Over Time	Vehicle Mix Varies Over Turn	Vehicle Mix Varies Over Entry	Vehicle Mix Source	PCU Factor for a HV (PCU)	Default Turning Proportions	Estimate from entry/exit counts	Turning Proportions Vary Over Time	Turning Proportions Vary Over Turn	Turning Proportions Vary Over Entry
		✓	✓	HV Percentages	2.00				✓	✓

Entry Flows

General Flows Data

Arm	Profile Type	Use Turning Counts	Average Demand Flow (PCU/hr)	Flow Scaling Factor (%)
A	ONE HOUR	✓	198.00	100.000
B	ONE HOUR	✓	25.00	100.000
C	ONE HOUR	✓	175.00	100.000
D	ONE HOUR	✓	41.00	100.000

Turning Proportions

Turning Counts / Proportions (PCU/hr) - Junction 1 (for whole period)

		To			
		A	B	C	D
From	A	0.000	15.000	171.000	12.000
	B	10.000	0.000	2.000	13.000
	C	152.000	3.000	0.000	20.000
	D	16.000	16.000	9.000	0.000

Turning Proportions (PCU) - Junction 1 (for whole period)

		To			
		A	B	C	D
From	A	0.00	0.08	0.86	0.06
	B	0.40	0.00	0.08	0.52
	C	0.87	0.02	0.00	0.11
	D	0.39	0.39	0.22	0.00

Vehicle Mix

Average PCU Per Vehicle - Junction 1 (for whole period)

		To			
		A	B	C	D
From	A	1.000	1.000	1.000	1.000
	B	1.000	1.000	1.000	1.000
	C	1.000	1.000	1.000	1.000
	D	1.000	1.000	1.000	1.000

Heavy Vehicle Percentages - Junction 1 (for whole period)

		To			
		A	B	C	D
From	A	0.0	0.0	0.0	0.0
	B	0.0	0.0	0.0	0.0
	C	0.0	0.0	0.0	0.0
	D	0.0	0.0	0.0	0.0

Results

Results Summary for whole modelled period

Stream	Max RFC	Max Delay (s)	Max Queue (PCU)	Max LOS
B-ACD	0.06	8.47	0.06	A
A-BCD	0.03	5.29	0.03	A
A-B	-	-	-	-
A-C	-	-	-	-
D-ABC	0.09	7.78	0.10	A
C-ABD	0.01	5.31	0.01	A
C-D	-	-	-	-
C-A	-	-	-	-

Main Results for each time segment

Main results: (15:45-16:00)

Stream	Total Demand (PCU/hr)	Entry Flow (PCU/hr)	Pedestrian Demand (Ped/hr)	Capacity (PCU/hr)	RFC	End Queue (PCU)	Delay (s)	LOS
B-ACD	18.82	18.66	0.00	478.66	0.039	0.04	7.824	A
A-BCD	11.25	11.17	0.00	692.26	0.016	0.02	5.285	A
A-B	11.11	11.11	0.00	-	-	-	-	-
A-C	126.70	126.70	0.00	-	-	-	-	-
D-ABC	30.87	30.62	0.00	531.32	0.058	0.06	7.186	A
C-ABD	2.77	2.76	0.00	680.74	0.004	0.00	5.309	A
C-D	15.00	15.00	0.00	-	-	-	-	-
C-A	113.98	113.98	0.00	-	-	-	-	-

Main results: (16:00-16:15)

Stream	Total Demand (PCU/hr)	Entry Flow (PCU/hr)	Pedestrian Demand (Ped/hr)	Capacity (PCU/hr)	RFC	End Queue (PCU)	Delay (s)	LOS
B-ACD	22.47	22.44	0.00	467.73	0.048	0.05	8.085	A
A-BCD	14.02	14.00	0.00	704.32	0.020	0.02	5.214	A
A-B	13.22	13.22	0.00	-	-	-	-	-
A-C	150.75	150.75	0.00	-	-	-	-	-
D-ABC	36.86	36.80	0.00	521.48	0.071	0.08	7.427	A
C-ABD	3.45	3.44	0.00	690.63	0.005	0.01	5.238	A
C-D	17.89	17.89	0.00	-	-	-	-	-
C-A	135.98	135.98	0.00	-	-	-	-	-

Main results: (16:15-16:30)

Stream	Total Demand (PCU/hr)	Entry Flow (PCU/hr)	Pedestrian Demand (Ped/hr)	Capacity (PCU/hr)	RFC	End Queue (PCU)	Delay (s)	LOS
B-ACD	27.53	27.47	0.00	452.65	0.061	0.06	8.466	A
A-BCD	18.19	18.15	0.00	721.08	0.025	0.03	5.121	A
A-B	16.11	16.11	0.00	-	-	-	-	-
A-C	183.70	183.70	0.00	-	-	-	-	-
D-ABC	45.14	45.06	0.00	507.86	0.089	0.10	7.779	A
C-ABD	4.46	4.46	0.00	704.47	0.006	0.01	5.142	A
C-D	21.89	21.89	0.00	-	-	-	-	-
C-A	166.33	166.33	0.00	-	-	-	-	-

Main results: (16:30-16:45)

Stream	Total Demand (PCU/hr)	Entry Flow (PCU/hr)	Pedestrian Demand (Ped/hr)	Capacity (PCU/hr)	RFC	End Queue (PCU)	Delay (s)	LOS
B-ACD	27.53	27.52	0.00	452.63	0.061	0.06	8.468	A
A-BCD	18.19	18.19	0.00	721.09	0.025	0.03	5.121	A
A-B	16.11	16.11	0.00	-	-	-	-	-
A-C	183.70	183.70	0.00	-	-	-	-	-
D-ABC	45.14	45.14	0.00	507.84	0.089	0.10	7.780	A
C-ABD	4.46	4.46	0.00	704.47	0.006	0.01	5.142	A
C-D	21.89	21.89	0.00	-	-	-	-	-
C-A	166.33	166.33	0.00	-	-	-	-	-

Main results: (16:45-17:00)

Stream	Total Demand (PCU/hr)	Entry Flow (PCU/hr)	Pedestrian Demand (Ped/hr)	Capacity (PCU/hr)	RFC	End Queue (PCU)	Delay (s)	LOS
B-ACD	22.47	22.53	0.00	467.70	0.048	0.05	8.089	A
A-BCD	14.03	14.06	0.00	704.33	0.020	0.02	5.215	A
A-B	13.22	13.22	0.00	-	-	-	-	-
A-C	150.75	150.75	0.00	-	-	-	-	-
D-ABC	36.86	36.94	0.00	521.47	0.071	0.08	7.433	A
C-ABD	3.45	3.46	0.00	690.61	0.005	0.01	5.240	A
C-D	17.89	17.89	0.00	-	-	-	-	-
C-A	135.98	135.98	0.00	-	-	-	-	-

Main results: (17:00-17:15)

Stream	Total Demand (PCU/hr)	Entry Flow (PCU/hr)	Pedestrian Demand (Ped/hr)	Capacity (PCU/hr)	RFC	End Queue (PCU)	Delay (s)	LOS
B-ACD	18.82	18.86	0.00	478.60	0.039	0.04	7.830	A
A-BCD	11.26	11.28	0.00	692.27	0.016	0.02	5.286	A
A-B	11.11	11.11	0.00	-	-	-	-	-
A-C	126.69	126.69	0.00	-	-	-	-	-
D-ABC	30.87	30.93	0.00	531.28	0.058	0.06	7.194	A
C-ABD	2.78	2.78	0.00	680.72	0.004	0.00	5.311	A
C-D	15.00	15.00	0.00	-	-	-	-	-
C-A	113.98	113.98	0.00	-	-	-	-	-

Existing Layout - 2020 base + dev, AM

Data Errors and Warnings

No errors or warnings

Analysis Set Details

Name	Roundabout Capacity Model	Description	Locked	Network Flow Scaling Factor (%)	Reason For Scaling Factors
Existing Layout	N/A			100.000	

Demand Set Details

Name	Scenario Name	Time Period Name	Description	Traffic Profile Type	Model Start Time (HH:mm)	Model Finish Time (HH:mm)	Model Time Period Length (min)	Time Segment Length (min)	Single Time Segment Only	Locked
2020 base + dev, AM	2020 base + dev	AM		ONE HOUR	07:45	09:15	90	15		

Junction Network

Junctions

Junction	Name	Junction Type	Major Road Direction	Arm Order	Junction Delay (s)	Junction LOS
1	(untitled)	Crossroads	Two-way	A,B,C,D	9.03	A

Junction Network Options

Driving Side	Lighting
Left	Normal/unknown

Arms

Arms

Arm	Arm	Name	Description	Arm Type
A	A	Aigburth Vale (S)		Major
B	B	Park Avenue (W)		Minor
C	C	Aigburth Vale (N)		Major
D	D	Park Avenue (E)		Minor

Major Arm Geometry

Arm	Width of carriageway (m)	Has kerbed central reserve	Width of kerbed central reserve (m)	Has right turn bay	Width For Right Turn (m)	Visibility For Right Turn (m)	Blocks?	Blocking Queue (PCU)
A	6.00		0.00		2.20	100.00	✓	0.00
C	6.00		0.00		2.20	100.00	✓	0.00

Geometries for Arm C are measured opposite Arm B. Geometries for Arm A (if relevant) are measured opposite Arm D.

Minor Arm Geometry

Arm	Minor Arm Type	Lane Width (m)	Lane Width (Left) (m)	Lane Width (Right) (m)	Width at give-way (m)	Width at 5m (m)	Width at 10m (m)	Width at 15m (m)	Width at 20m (m)	Estimate Flare Length	Flare Length (PCU)	Visibility To Left (m)	Visibility To Right (m)
B	One lane	3.00										65	55
D	One lane	3.00										30	90

Slope / Intercept / Capacity

Priority Intersection Slopes and Intercepts

Junction	Stream	Intercept (PCU/hr)	Slope for A-B	Slope for A-C	Slope for A-D	Slope for B-A	Slope for B-C	Slope for B-D	Slope for C-A	Slope for C-B	Slope for C-D	Slope for D-A	Slope for D-B	Slope for D-C
1	A-D	631.874	-	-	-	-	-	-	0.245	0.350	0.245	-	-	-
1	B-A	525.985	0.096	0.242	0.242	-	-	-	0.152	0.346	-	0.242	0.242	0.121
1	B-C	658.561	0.101	0.255	-	-	-	-	-	-	-	-	-	-
1	B-D, nearside lane	525.985	0.096	0.242	0.242	-	-	-	0.152	0.346	0.152	-	-	-
1	B-D, offside lane	525.985	0.096	0.242	0.242	-	-	-	0.152	0.346	0.152	-	-	-
1	C-B	631.874	0.245	0.245	0.350	-	-	-	-	-	-	-	-	-
1	D-A	680.595	-	-	-	-	-	-	0.264	-	0.104	-	-	-
1	D-B, nearside lane	531.554	0.154	0.154	0.350	-	-	-	0.245	0.245	0.097	-	-	-
1	D-B, offside lane	531.554	0.154	0.154	0.350	-	-	-	0.245	0.245	0.097	-	-	-
1	D-C	531.554	-	0.154	0.350	0.122	0.245	0.245	0.245	0.245	0.097	-	-	-

The slopes and intercepts shown above do NOT include any corrections or adjustments.

Streams may be combined, in which case capacity will be adjusted.

Values are shown for the first time segment only; they may differ for subsequent time segments.

Traffic Flows

Demand Set Data Options

Default Vehicle Mix	Vehicle Mix Varies Over Time	Vehicle Mix Varies Over Turn	Vehicle Mix Varies Over Entry	Vehicle Mix Source	PCU Factor for a HV (PCU)	Default Turning Proportions	Estimate from entry/exit counts	Turning Proportions Vary Over Time	Turning Proportions Vary Over Turn	Turning Proportions Vary Over Entry
		✓	✓	HV Percentages	2.00				✓	✓

Entry Flows

General Flows Data

Arm	Profile Type	Use Turning Counts	Average Demand Flow (PCU/hr)	Flow Scaling Factor (%)
A	ONE HOUR	✓	275.00	100.000
B	ONE HOUR	✓	33.00	100.000
C	ONE HOUR	✓	137.00	100.000
D	ONE HOUR	✓	114.00	100.000

Turning Proportions

Turning Counts / Proportions (PCU/hr) - Junction 1 (for whole period)

		To			
		A	B	C	D
From	A	0.000	59.000	197.000	19.000
	B	7.000	0.000	6.000	20.000
	C	135.000	2.000	0.000	0.000
	D	27.000	66.000	21.000	0.000

Turning Proportions (PCU) - Junction 1 (for whole period)

		To			
		A	B	C	D
From	A	0.00	0.21	0.72	0.07
	B	0.21	0.00	0.18	0.61
	C	0.99	0.01	0.00	0.00
	D	0.24	0.58	0.18	0.00

Vehicle Mix

Average PCU Per Vehicle - Junction 1 (for whole period)

		To			
		A	B	C	D
From	A	1.000	1.000	1.000	1.000
	B	1.000	1.000	1.000	1.000
	C	1.000	1.000	1.000	1.000
	D	1.000	1.000	1.000	1.000

Heavy Vehicle Percentages - Junction 1 (for whole period)

		To			
		A	B	C	D
From	A	0.0	0.0	0.0	0.0
	B	0.0	0.0	0.0	0.0
	C	0.0	0.0	0.0	0.0
	D	0.0	0.0	0.0	0.0

Results

Results Summary for whole modelled period

Stream	Max RFC	Max Delay (s)	Max Queue (PCU)	Max LOS
B-ACD	0.08	8.62	0.09	A
A-BCD	0.04	5.04	0.06	A
A-B	-	-	-	-
A-C	-	-	-	-
D-ABC	0.26	10.18	0.35	B
C-ABD	0.00	5.57	0.00	A
C-D	-	-	-	-
C-A	-	-	-	-

Main Results for each time segment

Main results: (07:45-08:00)

Stream	Total Demand (PCU/hr)	Entry Flow (PCU/hr)	Pedestrian Demand (Ped/hr)	Capacity (PCU/hr)	RFC	End Queue (PCU)	Delay (s)	LOS
B-ACD	24.84	24.63	0.00	483.40	0.051	0.05	7.844	A
A-BCD	19.14	19.01	0.00	732.95	0.026	0.03	5.042	A
A-B	43.30	43.30	0.00	-	-	-	-	-
A-C	144.59	144.59	0.00	-	-	-	-	-
D-ABC	85.83	85.02	0.00	505.26	0.170	0.20	8.550	A
C-ABD	1.78	1.77	0.00	648.38	0.003	0.00	5.566	A
C-D	0.00	0.00	0.00	-	-	-	-	-
C-A	101.36	101.36	0.00	-	-	-	-	-

Main results: (08:00-08:15)

Stream	Total Demand (PCU/hr)	Entry Flow (PCU/hr)	Pedestrian Demand (Ped/hr)	Capacity (PCU/hr)	RFC	End Queue (PCU)	Delay (s)	LOS
B-ACD	29.67	29.61	0.00	471.08	0.063	0.07	8.153	A
A-BCD	24.14	24.10	0.00	752.59	0.032	0.04	4.941	A
A-B	51.41	51.41	0.00	-	-	-	-	-
A-C	171.66	171.66	0.00	-	-	-	-	-
D-ABC	102.48	102.26	0.00	494.34	0.207	0.26	9.174	A
C-ABD	2.20	2.20	0.00	652.13	0.003	0.00	5.538	A
C-D	0.00	0.00	0.00	-	-	-	-	-
C-A	120.96	120.96	0.00	-	-	-	-	-

Main results: (08:15-08:30)

Stream	Total Demand (PCU/hr)	Entry Flow (PCU/hr)	Pedestrian Demand (Ped/hr)	Capacity (PCU/hr)	RFC	End Queue (PCU)	Delay (s)	LOS
B-ACD	36.33	36.26	0.00	454.06	0.080	0.09	8.616	A
A-BCD	31.78	31.72	0.00	779.56	0.041	0.06	4.813	A
A-B	62.46	62.46	0.00	-	-	-	-	-
A-C	208.55	208.55	0.00	-	-	-	-	-
D-ABC	125.52	125.15	0.00	479.23	0.262	0.35	10.157	B
C-ABD	2.83	2.82	0.00	657.62	0.004	0.00	5.497	A
C-D	0.00	0.00	0.00	-	-	-	-	-
C-A	148.01	148.01	0.00	-	-	-	-	-

Main results: (08:30-08:45)

Stream	Total Demand (PCU/hr)	Entry Flow (PCU/hr)	Pedestrian Demand (Ped/hr)	Capacity (PCU/hr)	RFC	End Queue (PCU)	Delay (s)	LOS
B-ACD	36.33	36.33	0.00	454.02	0.080	0.09	8.618	A
A-BCD	31.79	31.79	0.00	779.58	0.041	0.06	4.814	A
A-B	62.45	62.45	0.00	-	-	-	-	-
A-C	208.53	208.53	0.00	-	-	-	-	-
D-ABC	125.52	125.51	0.00	479.21	0.262	0.35	10.177	B
C-ABD	2.83	2.83	0.00	657.61	0.004	0.00	5.499	A
C-D	0.00	0.00	0.00	-	-	-	-	-
C-A	148.01	148.01	0.00	-	-	-	-	-

Main results: (08:45-09:00)

Stream	Total Demand (PCU/hr)	Entry Flow (PCU/hr)	Pedestrian Demand (Ped/hr)	Capacity (PCU/hr)	RFC	End Queue (PCU)	Delay (s)	LOS
B-ACD	29.67	29.74	0.00	471.02	0.063	0.07	8.160	A
A-BCD	24.16	24.22	0.00	752.62	0.032	0.04	4.942	A
A-B	51.41	51.41	0.00	-	-	-	-	-
A-C	171.65	171.65	0.00	-	-	-	-	-
D-ABC	102.48	102.83	0.00	494.31	0.207	0.26	9.205	A
C-ABD	2.20	2.20	0.00	652.10	0.003	0.00	5.540	A
C-D	0.00	0.00	0.00	-	-	-	-	-
C-A	120.96	120.96	0.00	-	-	-	-	-

Main results: (09:00-09:15)

Stream	Total Demand (PCU/hr)	Entry Flow (PCU/hr)	Pedestrian Demand (Ped/hr)	Capacity (PCU/hr)	RFC	End Queue (PCU)	Delay (s)	LOS
B-ACD	24.84	24.90	0.00	483.30	0.051	0.05	7.853	A
A-BCD	19.18	19.22	0.00	732.98	0.026	0.03	5.043	A
A-B	43.29	43.29	0.00	-	-	-	-	-
A-C	144.56	144.56	0.00	-	-	-	-	-
D-ABC	85.83	86.06	0.00	505.20	0.170	0.21	8.593	A
C-ABD	1.78	1.78	0.00	648.33	0.003	0.00	5.567	A
C-D	0.00	0.00	0.00	-	-	-	-	-
C-A	101.36	101.36	0.00	-	-	-	-	-

Existing Layout - 2020 base + dev, PM

Data Errors and Warnings

No errors or warnings

Analysis Set Details

Name	Roundabout Capacity Model	Description	Locked	Network Flow Scaling Factor (%)	Reason For Scaling Factors
Existing Layout	N/A			100.000	

Demand Set Details

Name	Scenario Name	Time Period Name	Description	Traffic Profile Type	Model Start Time (HH:mm)	Model Finish Time (HH:mm)	Model Time Period Length (min)	Time Segment Length (min)	Single Time Segment Only	Locked
2020 base + dev, PM	2020 base + dev	PM		ONE HOUR	15:45	17:15	90	15		

Junction Network

Junctions

Junction	Name	Junction Type	Major Road Direction	Arm Order	Junction Delay (s)	Junction LOS
1	(untitled)	Crossroads	Two-way	A,B,C,D	7.51	A

Junction Network Options

Driving Side	Lighting
Left	Normal/unknown

Arms

Arms

Arm	Arm	Name	Description	Arm Type
A	A	Aigburth Vale (S)		Major
B	B	Park Avenue (W)		Minor
C	C	Aigburth Vale (N)		Major
D	D	Park Avenue (E)		Minor

Major Arm Geometry

Arm	Width of carriageway (m)	Has kerbed central reserve	Width of kerbed central reserve (m)	Has right turn bay	Width For Right Turn (m)	Visibility For Right Turn (m)	Blocks?	Blocking Queue (PCU)
A	6.00		0.00		2.20	100.00	✓	0.00
C	6.00		0.00		2.20	100.00	✓	0.00

Geometries for Arm C are measured opposite Arm B. Geometries for Arm A (if relevant) are measured opposite Arm D.

Minor Arm Geometry

Arm	Minor Arm Type	Lane Width (m)	Lane Width (Left) (m)	Lane Width (Right) (m)	Width at give-way (m)	Width at 5m (m)	Width at 10m (m)	Width at 15m (m)	Width at 20m (m)	Estimate Flare Length	Flare Length (PCU)	Visibility To Left (m)	Visibility To Right (m)
B	One lane	3.00										65	55
D	One lane	3.00										30	90

Slope / Intercept / Capacity

Priority Intersection Slopes and Intercepts

Junction	Stream	Intercept (PCU/hr)	Slope for A-B	Slope for A-C	Slope for A-D	Slope for B-A	Slope for B-C	Slope for B-D	Slope for C-A	Slope for C-B	Slope for C-D	Slope for D-A	Slope for D-B	Slope for D-C
1	A-D	631.874	-	-	-	-	-	-	0.245	0.350	0.245	-	-	-
1	B-A	525.985	0.096	0.242	0.242	-	-	-	0.152	0.346	-	0.242	0.242	0.121
1	B-C	658.561	0.101	0.255	-	-	-	-	-	-	-	-	-	-
1	B-D, nearside lane	525.985	0.096	0.242	0.242	-	-	-	0.152	0.346	0.152	-	-	-
1	B-D, offside lane	525.985	0.096	0.242	0.242	-	-	-	0.152	0.346	0.152	-	-	-
1	C-B	631.874	0.245	0.245	0.350	-	-	-	-	-	-	-	-	-
1	D-A	680.595	-	-	-	-	-	-	0.264	-	0.104	-	-	-
1	D-B, nearside lane	531.554	0.154	0.154	0.350	-	-	-	0.245	0.245	0.097	-	-	-
1	D-B, offside lane	531.554	0.154	0.154	0.350	-	-	-	0.245	0.245	0.097	-	-	-
1	D-C	531.554	-	0.154	0.350	0.122	0.245	0.245	0.245	0.245	0.097	-	-	-

The slopes and intercepts shown above do NOT include any corrections or adjustments.

Streams may be combined, in which case capacity will be adjusted.

Values are shown for the first time segment only; they may differ for subsequent time segments.

Traffic Flows

Demand Set Data Options

Default Vehicle Mix	Vehicle Mix Varies Over Time	Vehicle Mix Varies Over Turn	Vehicle Mix Varies Over Entry	Vehicle Mix Source	PCU Factor for a HV (PCU)	Default Turning Proportions	Estimate from entry/exit counts	Turning Proportions Vary Over Time	Turning Proportions Vary Over Turn	Turning Proportions Vary Over Entry
		✓	✓	HV Percentages	2.00				✓	✓

Entry Flows

General Flows Data

Arm	Profile Type	Use Turning Counts	Average Demand Flow (PCU/hr)	Flow Scaling Factor (%)
A	ONE HOUR	✓	213.00	100.000
B	ONE HOUR	✓	26.00	100.000
C	ONE HOUR	✓	188.00	100.000
D	ONE HOUR	✓	44.00	100.000

Turning Proportions

Turning Counts / Proportions (PCU/hr) - Junction 1 (for whole period)

		To			
		A	B	C	D
From	A	0.000	16.000	184.000	13.000
	B	11.000	0.000	2.000	13.000
	C	163.000	3.000	0.000	22.000
	D	17.000	17.000	10.000	0.000

Turning Proportions (PCU) - Junction 1 (for whole period)

		To			
		A	B	C	D
From	A	0.00	0.08	0.86	0.06
	B	0.42	0.00	0.08	0.50
	C	0.87	0.02	0.00	0.12
	D	0.39	0.39	0.23	0.00

Vehicle Mix

Average PCU Per Vehicle - Junction 1 (for whole period)

		To			
		A	B	C	D
From	A	1.000	1.000	1.000	1.000
	B	1.000	1.000	1.000	1.000
	C	1.000	1.000	1.000	1.000
	D	1.000	1.000	1.000	1.000

Heavy Vehicle Percentages - Junction 1 (for whole period)

		To			
		A	B	C	D
From	A	0.0	0.0	0.0	0.0
	B	0.0	0.0	0.0	0.0
	C	0.0	0.0	0.0	0.0
	D	0.0	0.0	0.0	0.0

Results

Results Summary for whole modelled period

Stream	Max RFC	Max Delay (s)	Max Queue (PCU)	Max LOS
B-ACD	0.06	8.62	0.07	A
A-BCD	0.03	5.26	0.04	A
A-B	-	-	-	-
A-C	-	-	-	-
D-ABC	0.10	7.94	0.11	A
C-ABD	0.01	5.28	0.01	A
C-D	-	-	-	-
C-A	-	-	-	-

Main Results for each time segment

Main results: (15:45-16:00)

Stream	Total Demand (PCU/hr)	Entry Flow (PCU/hr)	Pedestrian Demand (Ped/hr)	Capacity (PCU/hr)	RFC	End Queue (PCU)	Delay (s)	LOS
B-ACD	19.57	19.40	0.00	474.02	0.041	0.04	7.916	A
A-BCD	12.38	12.30	0.00	696.97	0.018	0.02	5.258	A
A-B	11.84	11.84	0.00	-	-	-	-	-
A-C	136.14	136.14	0.00	-	-	-	-	-
D-ABC	33.13	32.86	0.00	527.00	0.063	0.07	7.282	A
C-ABD	2.82	2.80	0.00	684.57	0.004	0.00	5.279	A
C-D	16.50	16.50	0.00	-	-	-	-	-
C-A	122.22	122.22	0.00	-	-	-	-	-

Main results: (16:00-16:15)

Stream	Total Demand (PCU/hr)	Entry Flow (PCU/hr)	Pedestrian Demand (Ped/hr)	Capacity (PCU/hr)	RFC	End Queue (PCU)	Delay (s)	LOS
B-ACD	23.37	23.33	0.00	462.25	0.051	0.05	8.202	A
A-BCD	15.48	15.46	0.00	709.98	0.022	0.03	5.183	A
A-B	14.08	14.08	0.00	-	-	-	-	-
A-C	161.92	161.92	0.00	-	-	-	-	-
D-ABC	39.56	39.49	0.00	516.41	0.077	0.08	7.548	A
C-ABD	3.51	3.51	0.00	695.25	0.005	0.01	5.203	A
C-D	19.68	19.68	0.00	-	-	-	-	-
C-A	145.81	145.81	0.00	-	-	-	-	-

Main results: (16:15-16:30)

Stream	Total Demand (PCU/hr)	Entry Flow (PCU/hr)	Pedestrian Demand (Ped/hr)	Capacity (PCU/hr)	RFC	End Queue (PCU)	Delay (s)	LOS
B-ACD	28.63	28.57	0.00	446.00	0.064	0.07	8.623	A
A-BCD	20.17	20.13	0.00	728.05	0.028	0.04	5.085	A
A-B	17.15	17.15	0.00	-	-	-	-	-
A-C	197.20	197.20	0.00	-	-	-	-	-
D-ABC	48.44	48.35	0.00	501.73	0.097	0.11	7.938	A
C-ABD	4.56	4.56	0.00	710.20	0.006	0.01	5.101	A
C-D	24.07	24.07	0.00	-	-	-	-	-
C-A	178.36	178.36	0.00	-	-	-	-	-

Main results: (16:30-16:45)

Stream	Total Demand (PCU/hr)	Entry Flow (PCU/hr)	Pedestrian Demand (Ped/hr)	Capacity (PCU/hr)	RFC	End Queue (PCU)	Delay (s)	LOS
B-ACD	28.63	28.63	0.00	445.98	0.064	0.07	8.625	A
A-BCD	20.18	20.18	0.00	728.05	0.028	0.04	5.087	A
A-B	17.15	17.15	0.00	-	-	-	-	-
A-C	197.19	197.19	0.00	-	-	-	-	-
D-ABC	48.44	48.44	0.00	501.71	0.097	0.11	7.942	A
C-ABD	4.57	4.57	0.00	710.20	0.006	0.01	5.101	A
C-D	24.07	24.07	0.00	-	-	-	-	-
C-A	178.35	178.35	0.00	-	-	-	-	-

Main results: (16:45-17:00)

Stream	Total Demand (PCU/hr)	Entry Flow (PCU/hr)	Pedestrian Demand (Ped/hr)	Capacity (PCU/hr)	RFC	End Queue (PCU)	Delay (s)	LOS
B-ACD	23.37	23.43	0.00	462.21	0.051	0.05	8.205	A
A-BCD	15.49	15.53	0.00	709.99	0.022	0.03	5.185	A
A-B	14.08	14.08	0.00	-	-	-	-	-
A-C	161.91	161.91	0.00	-	-	-	-	-
D-ABC	39.56	39.65	0.00	516.39	0.077	0.08	7.554	A
C-ABD	3.51	3.52	0.00	695.24	0.005	0.01	5.206	A
C-D	19.68	19.68	0.00	-	-	-	-	-
C-A	145.81	145.81	0.00	-	-	-	-	-

Main results: (17:00-17:15)

Stream	Total Demand (PCU/hr)	Entry Flow (PCU/hr)	Pedestrian Demand (Ped/hr)	Capacity (PCU/hr)	RFC	End Queue (PCU)	Delay (s)	LOS
B-ACD	19.57	19.62	0.00	473.96	0.041	0.04	7.925	A
A-BCD	12.40	12.43	0.00	696.98	0.018	0.02	5.258	A
A-B	11.84	11.84	0.00	-	-	-	-	-
A-C	136.12	136.12	0.00	-	-	-	-	-
D-ABC	33.13	33.19	0.00	526.95	0.063	0.07	7.290	A
C-ABD	2.82	2.82	0.00	684.55	0.004	0.00	5.282	A
C-D	16.50	16.50	0.00	-	-	-	-	-
C-A	122.22	122.22	0.00	-	-	-	-	-

S|C|P

APPENDIX 10

Junctions 8

ARCADY 8 - Roundabout Module

Version: 8.0.4.487 [15039,24/03/2014]
© Copyright TRL Limited, 2014

For sales and distribution information, program advice and maintenance, contact TRL:
Tel: +44 (0)1344 770758 email: software@trl.co.uk Web: http://www.trlsoftware.co.uk

The users of this computer program for the solution of an engineering problem are in no way relieved of their responsibility for the correctness of the solution

Filename: ARCADY - Queens Drive_Park Avenue_Mossley Hill Drive.arc8
Path: Z:\Job Library\2014\14197 - Park Avenue, Sefton Park, Liverpool\Traffic Data
Report generation date: 26/08/2014 16:00:47

» Existing Layout - 2015 base + dev, AM
» Existing Layout - 2015 base + dev, PM
» Existing Layout - 2020 base + dev, AM
» Existing Layout - 2020 base + dev, PM

Summary of junction performance

	AM				PM			
	Queue (PCU)	Delay (s)	RFC	LOS	Queue (PCU)	Delay (s)	RFC	LOS
	Existing Layout - 2015 base + dev							
Arm 1	0.25	3.37	0.20	A	0.21	3.25	0.18	A
Arm 2	0.00	0.00	0.00	A	0.01	3.03	0.01	A
Arm 3	0.61	6.27	0.38	A	0.56	6.07	0.36	A
Arm 4	0.18	4.75	0.15	A	0.05	4.14	0.04	A
	Existing Layout - 2020 base + dev							
Arm 1	0.27	3.44	0.21	A	0.23	3.30	0.19	A
Arm 2	0.00	0.00	0.00	A	0.01	3.06	0.01	A
Arm 3	0.68	6.57	0.41	A	0.62	6.34	0.38	A
Arm 4	0.20	4.90	0.17	A	0.05	4.22	0.05	A

Values shown are the maximum values over all time segments. Delay is the maximum value of average delay per arriving vehicle.

"D1 - 2015 base + dev, AM " model duration: 07:45 - 09:15
"D2 - 2015 base + dev, PM" model duration: 15:45 - 17:15
"D3 - 2020 base + dev, AM" model duration: 07:45 - 09:15
"D4 - 2020 base + dev, PM" model duration: 15:45 - 17:15

Run using Junctions 8.0.4.487 at 26/08/2014 16:00:45

File summary

Title	Queens Drive_Park Avenue_Mossley Hill Drive Assessment
Location	Liverpool
Site Number	
Date	26/08/2014
Version	
Status	(new file)
Identifier	
Client	
Jobnumber	
Enumerator	NS
Description	

Analysis Options

Vehicle Length (m)	Do Queue Variations	Calculate Residual Capacity	Residual Capacity Criteria Type	RFC Threshold	Average Delay Threshold (s)	Queue Threshold (PCU)
5.75			N/A	0.85	36.00	20.00

Units

Distance Units	Speed Units	Traffic Units Input	Traffic Units Results	Flow Units	Average Delay Units	Total Delay Units	Rate Of Delay Units
m	kph	PCU	PCU	perHour	s	-Min	perMin

Existing Layout - 2015 base + dev, AM

Data Errors and Warnings

No errors or warnings

Analysis Set Details

Name	Roundabout Capacity Model	Description	Locked	Network Flow Scaling Factor (%)	Reason For Scaling Factors
Existing Layout	ARCADY			100.000	

Demand Set Details

Name	Scenario Name	Time Period Name	Description	Traffic Profile Type	Model Start Time (HH:mm)	Model Finish Time (HH:mm)	Model Time Period Length (min)	Time Segment Length (min)	Single Time Segment Only	Locked
2015 base + dev, AM	2015 base + dev	AM		ONE HOUR	07:45	09:15	90	15		

Junction Network

Junctions

Junction	Name	Junction Type	Arm Order	Grade Separated	Large Roundabout	Junction Delay (s)	Junction LOS
1	(untitled)	Roundabout	1,2,3,4			4.98	A

Junction Network Options

Driving Side	Lighting
Left	Normal/unknown

Arms

Arms

Arm	Arm	Name	Description
1	1	Mossley Hill Drive (S)	
2	2	Mossley Hill Drive (N)	
3	3	Queens Drive	
4	4	Park Avenue	

Capacity Options

Arm	Minimum Capacity (PCU/hr)	Maximum Capacity (PCU/hr)
1	0.00	99999.00
2	0.00	99999.00
3	0.00	99999.00
4	0.00	99999.00

Roundabout Geometry

Arm	V - Approach road half-width (m)	E - Entry width (m)	l' - Effective flare length (m)	R - Entry radius (m)	D - Inscribed circle diameter (m)	PHI - Conflict (entry) angle (deg)	Exit Only
1	4.50	4.50	0.00	500.00	28.00	45.00	
2	4.45	9.50	1.50	10.70	28.00	45.00	
3	3.00	11.00	1.00	15.90	28.00	45.00	
4	3.25	15.00	2.00	12.70	28.00	45.00	

Slope / Intercept / Capacity

Roundabout Slope and Intercept used in model

Arm	Enter slope and intercept directly	Entered slope	Entered intercept (PCU/hr)	Final Slope	Final Intercept (PCU/hr)
1		(calculated)	(calculated)	0.588	1356.538
2		(calculated)	(calculated)	0.556	1338.540
3		(calculated)	(calculated)	0.483	935.460
4		(calculated)	(calculated)	0.506	1071.212

The slope and intercept shown above include any corrections and adjustments.

Traffic Flows

Demand Set Data Options

Default Vehicle Mix	Vehicle Mix Varies Over Time	Vehicle Mix Varies Over Turn	Vehicle Mix Varies Over Entry	Vehicle Mix Source	PCU Factor for a HV (PCU)	Default Turning Proportions	Estimate from entry/exit counts	Turning Proportions Vary Over Time	Turning Proportions Vary Over Turn	Turning Proportions Vary Over Entry
		✓	✓	HV Percentages	2.00				✓	✓

Entry Flows

General Flows Data

Arm	Profile Type	Use Turning Counts	Average Demand Flow (PCU/hr)	Flow Scaling Factor (%)
1	ONE HOUR	✓	239.00	100.000
2	ONE HOUR	✓	4.00	100.000
3	ONE HOUR	✓	318.00	100.000
4	ONE HOUR	✓	125.00	100.000

Direct/Resultant Flows

Direct Flows Data

Time Segment	Arm	Direct Demand Entry Flow (PCU/hr)	DirectDemandEntryFlowInPCU (PCU/hr)	Direct Demand Exit Flow (PCU/hr)	Direct Demand Pedestrian Flow (Ped/hr)
07:45-08:00	1	179.93	179.93		
07:45-08:00	2	0.00	0.00		
07:45-08:00	3	239.41	239.41		
07:45-08:00	4	94.11	94.11		
08:00-08:15	1	214.86	214.86		
08:00-08:15	2	0.00	0.00		
08:00-08:15	3	285.88	285.88		
08:00-08:15	4	112.37	112.37		
08:15-08:30	1	263.14	263.14		
08:15-08:30	2	0.00	0.00		
08:15-08:30	3	350.12	350.12		
08:15-08:30	4	137.63	137.63		
08:30-08:45	1	263.14	263.14		
08:30-08:45	2	0.00	0.00		
08:30-08:45	3	350.12	350.12		
08:30-08:45	4	137.63	137.63		
08:45-09:00	1	214.86	214.86		
08:45-09:00	2	0.00	0.00		
08:45-09:00	3	285.88	285.88		
08:45-09:00	4	112.37	112.37		
09:00-09:15	1	179.93	179.93		
09:00-09:15	2	0.00	0.00		
09:00-09:15	3	239.41	239.41		
09:00-09:15	4	94.11	94.11		

Turning Proportions

Turning Counts / Proportions (PCU/hr) - Junction 1 (for whole period)

		To			
		1	2	3	4
From	1	0.000	2.000	215.000	22.000
	2	0.000	0.000	3.000	1.000
	3	316.000	0.000	0.000	2.000
	4	85.000	1.000	39.000	0.000

Turning Proportions (PCU) - Junction 1 (for whole period)

		To			
		1	2	3	4
From	1	0.00	0.01	0.90	0.09
	2	0.00	0.00	0.75	0.25
	3	0.99	0.00	0.00	0.01
	4	0.68	0.01	0.31	0.00

Vehicle Mix

Average PCU Per Vehicle - Junction 1 (for whole period)

		To			
		1	2	3	4
From	1	1.000	1.000	1.000	1.000
	2	1.000	1.000	1.000	1.000
	3	1.000	1.000	1.000	1.000
	4	1.000	1.000	1.000	1.000

Heavy Vehicle Percentages - Junction 1 (for whole period)

		To			
		1	2	3	4
From	1	0.0	0.0	0.0	0.0
	2	0.0	0.0	0.0	0.0
	3	0.0	0.0	0.0	0.0
	4	0.0	0.0	0.0	0.0

Results

Results Summary for whole modelled period

Arm	Max RFC	Max Delay (s)	Max Queue (PCU)	Max LOS
1	0.20	3.37	0.25	A
2	0.00	0.00	0.00	A
3	0.38	6.27	0.61	A
4	0.15	4.75	0.18	A

Main Results for each time segment

Main results: (07:45-08:00)

Arm	Total Demand (PCU/hr)	Entry Flow (PCU/hr)	Circulating Flow (PCU/hr)	Pedestrian Demand (Ped/hr)	Capacity (PCU/hr)	RFC	End Queue (PCU)	Delay (s)	LOS
1	179.93	179.31	29.97	0.00	1338.92	0.134	0.15	3.103	A
2	0.00	0.00	207.04	0.00	1223.39	0.000	0.00	0.000	A
3	239.41	238.03	16.51	0.00	927.49	0.258	0.35	5.210	A
4	94.11	93.67	236.53	0.00	951.58	0.099	0.11	4.194	A

Main results: (08:00-08:15)

Arm	Total Demand (PCU/hr)	Entry Flow (PCU/hr)	Circulating Flow (PCU/hr)	Pedestrian Demand (Ped/hr)	Capacity (PCU/hr)	RFC	End Queue (PCU)	Delay (s)	LOS
1	214.86	214.71	35.92	0.00	1335.43	0.161	0.19	3.211	A
2	0.00	0.00	247.94	0.00	1200.64	0.000	0.00	0.000	A
3	285.88	285.49	19.76	0.00	925.92	0.309	0.44	5.617	A
4	112.37	112.26	283.69	0.00	927.72	0.121	0.14	4.414	A

Main results: (08:15-08:30)

Arm	Total Demand (PCU/hr)	Entry Flow (PCU/hr)	Circulating Flow (PCU/hr)	Pedestrian Demand (Ped/hr)	Capacity (PCU/hr)	RFC	End Queue (PCU)	Delay (s)	LOS
1	263.14	262.93	43.99	0.00	1330.69	0.198	0.25	3.371	A
2	0.00	0.00	303.61	0.00	1169.68	0.000	0.00	0.000	A
3	350.12	349.48	24.20	0.00	923.78	0.379	0.60	6.262	A
4	137.63	137.45	347.28	0.00	895.56	0.154	0.18	4.747	A

Main results: (08:30-08:45)

Arm	Total Demand (PCU/hr)	Entry Flow (PCU/hr)	Circulating Flow (PCU/hr)	Pedestrian Demand (Ped/hr)	Capacity (PCU/hr)	RFC	End Queue (PCU)	Delay (s)	LOS
1	263.14	263.14	44.04	0.00	1330.66	0.198	0.25	3.371	A
2	0.00	0.00	303.88	0.00	1169.53	0.000	0.00	0.000	A
3	350.12	350.11	24.22	0.00	923.77	0.379	0.61	6.274	A
4	137.63	137.63	347.91	0.00	895.24	0.154	0.18	4.751	A

Main results: (08:45-09:00)

Arm	Total Demand (PCU/hr)	Entry Flow (PCU/hr)	Circulating Flow (PCU/hr)	Pedestrian Demand (Ped/hr)	Capacity (PCU/hr)	RFC	End Queue (PCU)	Delay (s)	LOS
1	214.86	215.07	36.01	0.00	1335.37	0.161	0.19	3.215	A
2	0.00	0.00	248.38	0.00	1200.40	0.000	0.00	0.000	A
3	285.88	286.50	19.80	0.00	925.90	0.309	0.45	5.635	A
4	112.37	112.54	284.70	0.00	927.21	0.121	0.14	4.419	A

Main results: (09:00-09:15)

Arm	Total Demand (PCU/hr)	Entry Flow (PCU/hr)	Circulating Flow (PCU/hr)	Pedestrian Demand (Ped/hr)	Capacity (PCU/hr)	RFC	End Queue (PCU)	Delay (s)	LOS
1	179.93	180.08	30.15	0.00	1338.82	0.134	0.16	3.106	A
2	0.00	0.00	207.97	0.00	1222.87	0.000	0.00	0.000	A
3	239.41	239.81	16.58	0.00	927.46	0.258	0.35	5.237	A
4	94.11	94.22	238.30	0.00	950.68	0.099	0.11	4.205	A

Existing Layout - 2015 base + dev, PM

Data Errors and Warnings

No errors or warnings

Analysis Set Details

Name	Roundabout Capacity Model	Description	Locked	Network Flow Scaling Factor (%)	Reason For Scaling Factors
Existing Layout	ARCADY			100.000	

Demand Set Details

Name	Scenario Name	Time Period Name	Description	Traffic Profile Type	Model Start Time (HH:mm)	Model Finish Time (HH:mm)	Model Time Period Length (min)	Time Segment Length (min)	Single Time Segment Only	Locked
2015 base + dev, PM	2015 base + dev	PM		ONE HOUR	15:45	17:15	90	15		

Junction Network

Junctions

Junction	Name	Junction Type	Arm Order	Grade Separated	Large Roundabout	Junction Delay (s)	Junction LOS
1	(untitled)	Roundabout	1,2,3,4			4.82	A

Junction Network Options

Driving Side	Lighting
Left	Normal/unknown

Arms

Arms

Arm	Arm	Name	Description
1	1	Mossley Hill Drive (S)	
2	2	Mossley Hill Drive (N)	
3	3	Queens Drive	
4	4	Park Avenue	

Capacity Options

Arm	Minimum Capacity (PCU/hr)	Maximum Capacity (PCU/hr)
1	0.00	99999.00
2	0.00	99999.00
3	0.00	99999.00
4	0.00	99999.00

Roundabout Geometry

Arm	V - Approach road half-width (m)	E - Entry width (m)	l' - Effective flare length (m)	R - Entry radius (m)	D - Inscribed circle diameter (m)	PHI - Conflict (entry) angle (deg)	Exit Only
1	4.50	4.50	0.00	500.00	28.00	45.00	
2	4.45	9.50	1.50	10.70	28.00	45.00	
3	3.00	11.00	1.00	15.90	28.00	45.00	
4	3.25	15.00	2.00	12.70	28.00	45.00	

Slope / Intercept / Capacity

Roundabout Slope and Intercept used in model

Arm	Enter slope and intercept directly	Entered slope	Entered intercept (PCU/hr)	Final Slope	Final Intercept (PCU/hr)
1		(calculated)	(calculated)	0.588	1356.538
2		(calculated)	(calculated)	0.556	1338.540
3		(calculated)	(calculated)	0.483	935.460
4		(calculated)	(calculated)	0.506	1071.212

The slope and intercept shown above include any corrections and adjustments.

Traffic Flows

Demand Set Data Options

Default Vehicle Mix	Vehicle Mix Varies Over Time	Vehicle Mix Varies Over Turn	Vehicle Mix Varies Over Entry	Vehicle Mix Source	PCU Factor for a HV (PCU)	Default Turning Proportions	Estimate from entry/exit counts	Turning Proportions Vary Over Time	Turning Proportions Vary Over Turn	Turning Proportions Vary Over Entry
		✓	✓	HV Percentages	2.00				✓	✓

Entry Flows

General Flows Data

Arm	Profile Type	Use Turning Counts	Average Demand Flow (PCU/hr)	Flow Scaling Factor (%)
1	ONE HOUR	✓	214.00	100.000
2	ONE HOUR	✓	9.00	100.000
3	ONE HOUR	✓	301.00	100.000
4	ONE HOUR	✓	36.00	100.000

Direct/Resultant Flows

Direct Flows Data

Time Segment	Arm	Direct Demand Entry Flow (PCU/hr)	DirectDemandEntryFlowInPCU (PCU/hr)	Direct Demand Exit Flow (PCU/hr)	Direct Demand Pedestrian Flow (Ped/hr)
15:45-16:00	1	161.11	161.11		
15:45-16:00	2	6.78	6.78		
15:45-16:00	3	226.61	226.61		
15:45-16:00	4	27.10	27.10		
16:00-16:15	1	192.38	192.38		
16:00-16:15	2	8.09	8.09		
16:00-16:15	3	270.59	270.59		
16:00-16:15	4	32.36	32.36		
16:15-16:30	1	235.62	235.62		
16:15-16:30	2	9.91	9.91		
16:15-16:30	3	331.41	331.41		
16:15-16:30	4	39.64	39.64		
16:30-16:45	1	235.62	235.62		
16:30-16:45	2	9.91	9.91		
16:30-16:45	3	331.41	331.41		
16:30-16:45	4	39.64	39.64		
16:45-17:00	1	192.38	192.38		
16:45-17:00	2	8.09	8.09		
16:45-17:00	3	270.59	270.59		
16:45-17:00	4	32.36	32.36		
17:00-17:15	1	161.11	161.11		
17:00-17:15	2	6.78	6.78		
17:00-17:15	3	226.61	226.61		
17:00-17:15	4	27.10	27.10		

Turning Proportions

Turning Counts / Proportions (PCU/hr) - Junction 1 (for whole period)

		To			
		1	2	3	4
From	1	0.000	0.000	195.000	19.000
	2	1.000	0.000	7.000	1.000
	3	289.000	3.000	0.000	9.000
	4	20.000	1.000	15.000	0.000

Turning Proportions (PCU) - Junction 1 (for whole period)

		To			
		1	2	3	4
From	1	0.00	0.00	0.91	0.09
	2	0.11	0.00	0.78	0.11
	3	0.96	0.01	0.00	0.03
	4	0.56	0.03	0.42	0.00

Vehicle Mix

Average PCU Per Vehicle - Junction 1 (for whole period)

		To			
		1	2	3	4
From	1	1.000	1.000	1.000	1.000
	2	1.000	1.000	1.000	1.000
	3	1.000	1.000	1.000	1.000
	4	1.000	1.000	1.000	1.000

Heavy Vehicle Percentages - Junction 1 (for whole period)

		To			
		1	2	3	4
From	1	0.0	0.0	0.0	0.0
	2	0.0	0.0	0.0	0.0
	3	0.0	0.0	0.0	0.0
	4	0.0	0.0	0.0	0.0

Results

Results Summary for whole modelled period

Arm	Max RFC	Max Delay (s)	Max Queue (PCU)	Max LOS
1	0.18	3.25	0.21	A
2	0.01	3.03	0.01	A
3	0.36	6.07	0.56	A
4	0.04	4.14	0.05	A

Main Results for each time segment

Main results: (15:45-16:00)

Arm	Total Demand (PCU/hr)	Entry Flow (PCU/hr)	Circulating Flow (PCU/hr)	Pedestrian Demand (Ped/hr)	Capacity (PCU/hr)	RFC	End Queue (PCU)	Delay (s)	LOS
1	161.11	160.57	14.24	0.00	1348.17	0.120	0.14	3.029	A
2	6.78	6.75	171.81	0.00	1242.98	0.005	0.01	2.911	A
3	226.61	225.33	15.76	0.00	927.85	0.244	0.32	5.115	A
4	27.10	26.99	219.34	0.00	960.27	0.028	0.03	3.857	A

Main results: (16:00-16:15)

Arm	Total Demand (PCU/hr)	Entry Flow (PCU/hr)	Circulating Flow (PCU/hr)	Pedestrian Demand (Ped/hr)	Capacity (PCU/hr)	RFC	End Queue (PCU)	Delay (s)	LOS
1	192.38	192.26	17.07	0.00	1346.51	0.143	0.17	3.118	A
2	8.09	8.09	205.73	0.00	1224.12	0.007	0.01	2.959	A
3	270.59	270.24	18.87	0.00	926.35	0.292	0.41	5.484	A
4	32.36	32.34	263.06	0.00	938.16	0.035	0.04	3.974	A

Main results: (16:15-16:30)

Arm	Total Demand (PCU/hr)	Entry Flow (PCU/hr)	Circulating Flow (PCU/hr)	Pedestrian Demand (Ped/hr)	Capacity (PCU/hr)	RFC	End Queue (PCU)	Delay (s)	LOS
1	235.62	235.44	20.90	0.00	1344.26	0.175	0.21	3.246	A
2	9.91	9.90	251.93	0.00	1198.42	0.008	0.01	3.028	A
3	331.41	330.83	23.10	0.00	924.31	0.359	0.55	6.059	A
4	39.64	39.60	322.04	0.00	908.33	0.044	0.05	4.143	A

Main results: (16:30-16:45)

Arm	Total Demand (PCU/hr)	Entry Flow (PCU/hr)	Circulating Flow (PCU/hr)	Pedestrian Demand (Ped/hr)	Capacity (PCU/hr)	RFC	End Queue (PCU)	Delay (s)	LOS
1	235.62	235.62	20.92	0.00	1344.24	0.175	0.21	3.246	A
2	9.91	9.91	252.13	0.00	1198.31	0.008	0.01	3.028	A
3	331.41	331.40	23.12	0.00	924.30	0.359	0.56	6.071	A
4	39.64	39.64	322.59	0.00	908.05	0.044	0.05	4.145	A

Main results: (16:45-17:00)

Arm	Total Demand (PCU/hr)	Entry Flow (PCU/hr)	Circulating Flow (PCU/hr)	Pedestrian Demand (Ped/hr)	Capacity (PCU/hr)	RFC	End Queue (PCU)	Delay (s)	LOS
1	192.38	192.56	17.10	0.00	1346.49	0.143	0.17	3.119	A
2	8.09	8.10	206.06	0.00	1223.93	0.007	0.01	2.962	A
3	270.59	271.15	18.90	0.00	926.34	0.292	0.42	5.498	A
4	32.36	32.40	263.94	0.00	937.71	0.035	0.04	3.977	A

Main results: (17:00-17:15)

Arm	Total Demand (PCU/hr)	Entry Flow (PCU/hr)	Circulating Flow (PCU/hr)	Pedestrian Demand (Ped/hr)	Capacity (PCU/hr)	RFC	End Queue (PCU)	Delay (s)	LOS
1	161.11	161.23	14.32	0.00	1348.12	0.120	0.14	3.035	A
2	6.78	6.78	172.54	0.00	1242.58	0.005	0.01	2.914	A
3	226.61	226.97	15.82	0.00	927.82	0.244	0.33	5.138	A
4	27.10	27.13	220.94	0.00	959.46	0.028	0.03	3.861	A

Existing Layout - 2020 base + dev, AM

Data Errors and Warnings

No errors or warnings

Analysis Set Details

Name	Roundabout Capacity Model	Description	Locked	Network Flow Scaling Factor (%)	Reason For Scaling Factors
Existing Layout	ARCADY			100.000	

Demand Set Details

Name	Scenario Name	Time Period Name	Description	Traffic Profile Type	Model Start Time (HH:mm)	Model Finish Time (HH:mm)	Model Time Period Length (min)	Time Segment Length (min)	Single Time Segment Only	Locked
2020 base + dev, AM	2020 base + dev	AM		ONE HOUR	07:45	09:15	90	15		

Junction Network

Junctions

Junction	Name	Junction Type	Arm Order	Grade Separated	Large Roundabout	Junction Delay (s)	Junction LOS
1	(untitled)	Roundabout	1,2,3,4			5.17	A

Junction Network Options

Driving Side	Lighting
Left	Normal/unknown

Arms

Arms

Arm	Arm	Name	Description
1	1	Mossley Hill Drive (S)	
2	2	Mossley Hill Drive (N)	
3	3	Queens Drive	
4	4	Park Avenue	

Capacity Options

Arm	Minimum Capacity (PCU/hr)	Maximum Capacity (PCU/hr)
1	0.00	99999.00
2	0.00	99999.00
3	0.00	99999.00
4	0.00	99999.00

Roundabout Geometry

Arm	V - Approach road half-width (m)	E - Entry width (m)	l' - Effective flare length (m)	R - Entry radius (m)	D - Inscribed circle diameter (m)	PHI - Conflict (entry) angle (deg)	Exit Only
1	4.50	4.50	0.00	500.00	28.00	45.00	
2	4.45	9.50	1.50	10.70	28.00	45.00	
3	3.00	11.00	1.00	15.90	28.00	45.00	
4	3.25	15.00	2.00	12.70	28.00	45.00	

Slope / Intercept / Capacity

Roundabout Slope and Intercept used in model

Arm	Enter slope and intercept directly	Entered slope	Entered intercept (PCU/hr)	Final Slope	Final Intercept (PCU/hr)
1		(calculated)	(calculated)	0.588	1356.538
2		(calculated)	(calculated)	0.556	1338.540
3		(calculated)	(calculated)	0.483	935.460
4		(calculated)	(calculated)	0.506	1071.212

The slope and intercept shown above include any corrections and adjustments.

Traffic Flows

Demand Set Data Options

Default Vehicle Mix	Vehicle Mix Varies Over Time	Vehicle Mix Varies Over Turn	Vehicle Mix Varies Over Entry	Vehicle Mix Source	PCU Factor for a HV (PCU)	Default Turning Proportions	Estimate from entry/exit counts	Turning Proportions Vary Over Time	Turning Proportions Vary Over Turn	Turning Proportions Vary Over Entry
		✓	✓	HV Percentages	2.00				✓	✓

Entry Flows

General Flows Data

Arm	Profile Type	Use Turning Counts	Average Demand Flow (PCU/hr)	Flow Scaling Factor (%)
1	ONE HOUR	✓	256.00	100.000
2	ONE HOUR	✓	4.00	100.000
3	ONE HOUR	✓	341.00	100.000
4	ONE HOUR	✓	134.00	100.000

Direct/Resultant Flows

Direct Flows Data

Time Segment	Arm	Direct Demand Entry Flow (PCU/hr)	DirectDemandEntryFlowInPCU (PCU/hr)	Direct Demand Exit Flow (PCU/hr)	Direct Demand Pedestrian Flow (Ped/hr)
07:45-08:00	1	192.73	192.73		
07:45-08:00	2	0.00	0.00		
07:45-08:00	3	256.72	256.72		
07:45-08:00	4	100.88	100.88		
08:00-08:15	1	230.14	230.14		
08:00-08:15	2	0.00	0.00		
08:00-08:15	3	306.55	306.55		
08:00-08:15	4	120.46	120.46		
08:15-08:30	1	281.86	281.86		
08:15-08:30	2	0.00	0.00		
08:15-08:30	3	375.45	375.45		
08:15-08:30	4	147.54	147.54		
08:30-08:45	1	281.86	281.86		
08:30-08:45	2	0.00	0.00		
08:30-08:45	3	375.45	375.45		
08:30-08:45	4	147.54	147.54		
08:45-09:00	1	230.14	230.14		
08:45-09:00	2	0.00	0.00		
08:45-09:00	3	306.55	306.55		
08:45-09:00	4	120.46	120.46		
09:00-09:15	1	192.73	192.73		
09:00-09:15	2	0.00	0.00		
09:00-09:15	3	256.72	256.72		
09:00-09:15	4	100.88	100.88		

Turning Proportions

Turning Counts / Proportions (PCU/hr) - Junction 1 (for whole period)

		To			
		1	2	3	4
From	1	0.000	2.000	231.000	23.000
	2	0.000	0.000	3.000	1.000
	3	339.000	0.000	0.000	2.000
	4	91.000	1.000	42.000	0.000

Turning Proportions (PCU) - Junction 1 (for whole period)

		To			
		1	2	3	4
From	1	0.00	0.01	0.90	0.09
	2	0.00	0.00	0.75	0.25
	3	0.99	0.00	0.00	0.01
	4	0.68	0.01	0.31	0.00

Vehicle Mix

Average PCU Per Vehicle - Junction 1 (for whole period)

		To			
		1	2	3	4
From	1	1.000	1.000	1.000	1.000
	2	1.000	1.000	1.000	1.000
	3	1.000	1.000	1.000	1.000
	4	1.000	1.000	1.000	1.000

Heavy Vehicle Percentages - Junction 1 (for whole period)

		To			
		1	2	3	4
From	1	0.0	0.0	0.0	0.0
	2	0.0	0.0	0.0	0.0
	3	0.0	0.0	0.0	0.0
	4	0.0	0.0	0.0	0.0

Results

Results Summary for whole modelled period

Arm	Max RFC	Max Delay (s)	Max Queue (PCU)	Max LOS
1	0.21	3.44	0.27	A
2	0.00	0.00	0.00	A
3	0.41	6.57	0.68	A
4	0.17	4.90	0.20	A

Main Results for each time segment

Main results: (07:45-08:00)

Arm	Total Demand (PCU/hr)	Entry Flow (PCU/hr)	Circulating Flow (PCU/hr)	Pedestrian Demand (Ped/hr)	Capacity (PCU/hr)	RFC	End Queue (PCU)	Delay (s)	LOS
1	192.73	192.06	32.22	0.00	1337.60	0.144	0.17	3.141	A
2	0.00	0.00	222.03	0.00	1215.05	0.000	0.00	0.000	A
3	256.72	255.20	17.26	0.00	927.13	0.277	0.38	5.346	A
4	100.88	100.41	253.71	0.00	942.89	0.107	0.12	4.271	A

Main results: (08:00-08:15)

Arm	Total Demand (PCU/hr)	Entry Flow (PCU/hr)	Circulating Flow (PCU/hr)	Pedestrian Demand (Ped/hr)	Capacity (PCU/hr)	RFC	End Queue (PCU)	Delay (s)	LOS
1	230.14	229.98	38.62	0.00	1333.84	0.173	0.21	3.260	A
2	0.00	0.00	265.90	0.00	1190.65	0.000	0.00	0.000	A
3	306.55	306.11	20.66	0.00	925.49	0.331	0.49	5.809	A
4	120.46	120.34	304.31	0.00	917.29	0.131	0.15	4.517	A

Main results: (08:15-08:30)

Arm	Total Demand (PCU/hr)	Entry Flow (PCU/hr)	Circulating Flow (PCU/hr)	Pedestrian Demand (Ped/hr)	Capacity (PCU/hr)	RFC	End Queue (PCU)	Delay (s)	LOS
1	281.86	281.62	47.28	0.00	1328.75	0.212	0.27	3.437	A
2	0.00	0.00	325.60	0.00	1157.45	0.000	0.00	0.000	A
3	375.45	374.70	25.30	0.00	923.25	0.407	0.68	6.553	A
4	147.54	147.34	372.50	0.00	882.80	0.167	0.20	4.893	A

Main results: (08:30-08:45)

Arm	Total Demand (PCU/hr)	Entry Flow (PCU/hr)	Circulating Flow (PCU/hr)	Pedestrian Demand (Ped/hr)	Capacity (PCU/hr)	RFC	End Queue (PCU)	Delay (s)	LOS
1	281.86	281.86	47.34	0.00	1328.72	0.212	0.27	3.438	A
2	0.00	0.00	325.90	0.00	1157.28	0.000	0.00	0.000	A
3	375.45	375.43	25.32	0.00	923.24	0.407	0.68	6.571	A
4	147.54	147.53	373.23	0.00	882.44	0.167	0.20	4.898	A

Main results: (08:45-09:00)

Arm	Total Demand (PCU/hr)	Entry Flow (PCU/hr)	Circulating Flow (PCU/hr)	Pedestrian Demand (Ped/hr)	Capacity (PCU/hr)	RFC	End Queue (PCU)	Delay (s)	LOS
1	230.14	230.38	38.72	0.00	1333.78	0.173	0.21	3.265	A
2	0.00	0.00	266.39	0.00	1190.38	0.000	0.00	0.000	A
3	306.55	307.28	20.70	0.00	925.47	0.331	0.50	5.832	A
4	120.46	120.66	305.47	0.00	916.71	0.131	0.15	4.523	A

Main results: (09:00-09:15)

Arm	Total Demand (PCU/hr)	Entry Flow (PCU/hr)	Circulating Flow (PCU/hr)	Pedestrian Demand (Ped/hr)	Capacity (PCU/hr)	RFC	End Queue (PCU)	Delay (s)	LOS
1	192.73	192.89	32.41	0.00	1337.49	0.144	0.17	3.147	A
2	0.00	0.00	223.04	0.00	1214.49	0.000	0.00	0.000	A
3	256.72	257.18	17.33	0.00	927.09	0.277	0.39	5.379	A
4	100.88	101.01	255.67	0.00	941.90	0.107	0.12	4.283	A

Existing Layout - 2020 base + dev, PM

Data Errors and Warnings

No errors or warnings

Analysis Set Details

Name	Roundabout Capacity Model	Description	Locked	Network Flow Scaling Factor (%)	Reason For Scaling Factors
Existing Layout	ARCADY			100.000	

Demand Set Details

Name	Scenario Name	Time Period Name	Description	Traffic Profile Type	Model Start Time (HH:mm)	Model Finish Time (HH:mm)	Model Time Period Length (min)	Time Segment Length (min)	Single Time Segment Only	Locked
2020 base + dev, PM	2020 base + dev	PM		ONE HOUR	15:45	17:15	90	15		

Junction Network

Junctions

Junction	Name	Junction Type	Arm Order	Grade Separated	Large Roundabout	Junction Delay (s)	Junction LOS
1	(untitled)	Roundabout	1,2,3,4			4.98	A

Junction Network Options

Driving Side	Lighting
Left	Normal/unknown

Arms

Arms

Arm	Arm	Name	Description
1	1	Mossley Hill Drive (S)	
2	2	Mossley Hill Drive (N)	
3	3	Queens Drive	
4	4	Park Avenue	

Capacity Options

Arm	Minimum Capacity (PCU/hr)	Maximum Capacity (PCU/hr)
1	0.00	99999.00
2	0.00	99999.00
3	0.00	99999.00
4	0.00	99999.00

Roundabout Geometry

Arm	V - Approach road half-width (m)	E - Entry width (m)	l' - Effective flare length (m)	R - Entry radius (m)	D - Inscribed circle diameter (m)	PHI - Conflict (entry) angle (deg)	Exit Only
1	4.50	4.50	0.00	500.00	28.00	45.00	
2	4.45	9.50	1.50	10.70	28.00	45.00	
3	3.00	11.00	1.00	15.90	28.00	45.00	
4	3.25	15.00	2.00	12.70	28.00	45.00	

Slope / Intercept / Capacity

Roundabout Slope and Intercept used in model

Arm	Enter slope and intercept directly	Entered slope	Entered intercept (PCU/hr)	Final Slope	Final Intercept (PCU/hr)
1		(calculated)	(calculated)	0.588	1356.538
2		(calculated)	(calculated)	0.556	1338.540
3		(calculated)	(calculated)	0.483	935.460
4		(calculated)	(calculated)	0.506	1071.212

The slope and intercept shown above include any corrections and adjustments.

Traffic Flows

Demand Set Data Options

Default Vehicle Mix	Vehicle Mix Varies Over Time	Vehicle Mix Varies Over Turn	Vehicle Mix Varies Over Entry	Vehicle Mix Source	PCU Factor for a HV (PCU)	Default Turning Proportions	Estimate from entry/exit counts	Turning Proportions Vary Over Time	Turning Proportions Vary Over Turn	Turning Proportions Vary Over Entry
		✓	✓	HV Percentages	2.00				✓	✓

Entry Flows

General Flows Data

Arm	Profile Type	Use Turning Counts	Average Demand Flow (PCU/hr)	Flow Scaling Factor (%)
1	ONE HOUR	✓	230.00	100.000
2	ONE HOUR	✓	10.00	100.000
3	ONE HOUR	✓	323.00	100.000
4	ONE HOUR	✓	39.00	100.000

Direct/Resultant Flows

Direct Flows Data

Time Segment	Arm	Direct Demand Entry Flow (PCU/hr)	DirectDemandEntryFlowInPCU (PCU/hr)	Direct Demand Exit Flow (PCU/hr)	Direct Demand Pedestrian Flow (Ped/hr)
15:45-16:00	1	173.16	173.16		
15:45-16:00	2	7.53	7.53		
15:45-16:00	3	243.17	243.17		
15:45-16:00	4	29.36	29.36		
16:00-16:15	1	206.77	206.77		
16:00-16:15	2	8.99	8.99		
16:00-16:15	3	290.37	290.37		
16:00-16:15	4	35.06	35.06		
16:15-16:30	1	253.23	253.23		
16:15-16:30	2	11.01	11.01		
16:15-16:30	3	355.63	355.63		
16:15-16:30	4	42.94	42.94		
16:30-16:45	1	253.23	253.23		
16:30-16:45	2	11.01	11.01		
16:30-16:45	3	355.63	355.63		
16:30-16:45	4	42.94	42.94		
16:45-17:00	1	206.77	206.77		
16:45-17:00	2	8.99	8.99		
16:45-17:00	3	290.37	290.37		
16:45-17:00	4	35.06	35.06		
17:00-17:15	1	173.16	173.16		
17:00-17:15	2	7.53	7.53		
17:00-17:15	3	243.17	243.17		
17:00-17:15	4	29.36	29.36		

Turning Proportions

Turning Counts / Proportions (PCU/hr) - Junction 1 (for whole period)

		To			
		1	2	3	4
From	1	0.000	0.000	210.000	20.000
	2	1.000	0.000	8.000	1.000
	3	310.000	3.000	0.000	10.000
	4	22.000	1.000	16.000	0.000

Turning Proportions (PCU) - Junction 1 (for whole period)

		To			
		1	2	3	4
From	1	0.00	0.00	0.91	0.09
	2	0.10	0.00	0.80	0.10
	3	0.96	0.01	0.00	0.03
	4	0.56	0.03	0.41	0.00

Vehicle Mix

Average PCU Per Vehicle - Junction 1 (for whole period)

		To			
		1	2	3	4
From	1	1.000	1.000	1.000	1.000
	2	1.000	1.000	1.000	1.000
	3	1.000	1.000	1.000	1.000
	4	1.000	1.000	1.000	1.000

Heavy Vehicle Percentages - Junction 1 (for whole period)

		To			
		1	2	3	4
From	1	0.0	0.0	0.0	0.0
	2	0.0	0.0	0.0	0.0
	3	0.0	0.0	0.0	0.0
	4	0.0	0.0	0.0	0.0

Results

Results Summary for whole modelled period

Arm	Max RFC	Max Delay (s)	Max Queue (PCU)	Max LOS
1	0.19	3.30	0.23	A
2	0.01	3.06	0.01	A
3	0.38	6.34	0.62	A
4	0.05	4.22	0.05	A

Main Results for each time segment

Main results: (15:45-16:00)

Arm	Total Demand (PCU/hr)	Entry Flow (PCU/hr)	Circulating Flow (PCU/hr)	Pedestrian Demand (Ped/hr)	Capacity (PCU/hr)	RFC	End Queue (PCU)	Delay (s)	LOS
1	173.16	172.57	14.99	0.00	1347.73	0.128	0.15	3.061	A
2	7.53	7.50	184.56	0.00	1235.89	0.006	0.01	2.930	A
3	243.17	241.76	16.51	0.00	927.49	0.262	0.35	5.239	A
4	29.36	29.23	235.03	0.00	952.34	0.031	0.03	3.900	A

Main results: (16:00-16:15)

Arm	Total Demand (PCU/hr)	Entry Flow (PCU/hr)	Circulating Flow (PCU/hr)	Pedestrian Demand (Ped/hr)	Capacity (PCU/hr)	RFC	End Queue (PCU)	Delay (s)	LOS
1	206.77	206.63	17.96	0.00	1345.98	0.154	0.18	3.159	A
2	8.99	8.98	221.00	0.00	1215.63	0.007	0.01	2.982	A
3	290.37	289.97	19.76	0.00	925.92	0.314	0.45	5.657	A
4	35.06	35.03	281.89	0.00	928.63	0.038	0.04	4.028	A

Main results: (16:15-16:30)

Arm	Total Demand (PCU/hr)	Entry Flow (PCU/hr)	Circulating Flow (PCU/hr)	Pedestrian Demand (Ped/hr)	Capacity (PCU/hr)	RFC	End Queue (PCU)	Delay (s)	LOS
1	253.23	253.03	22.00	0.00	1343.61	0.188	0.23	3.300	A
2	11.01	11.00	270.63	0.00	1188.02	0.009	0.01	3.057	A
3	355.63	354.96	24.20	0.00	923.78	0.385	0.62	6.320	A
4	42.94	42.90	345.08	0.00	896.68	0.048	0.05	4.216	A

Main results: (16:30-16:45)

Arm	Total Demand (PCU/hr)	Entry Flow (PCU/hr)	Circulating Flow (PCU/hr)	Pedestrian Demand (Ped/hr)	Capacity (PCU/hr)	RFC	End Queue (PCU)	Delay (s)	LOS
1	253.23	253.23	22.02	0.00	1343.60	0.188	0.23	3.300	A
2	11.01	11.01	270.85	0.00	1187.90	0.009	0.01	3.058	A
3	355.63	355.62	24.22	0.00	923.77	0.385	0.62	6.335	A
4	42.94	42.94	345.71	0.00	896.36	0.048	0.05	4.218	A

Main results: (16:45-17:00)

Arm	Total Demand (PCU/hr)	Entry Flow (PCU/hr)	Circulating Flow (PCU/hr)	Pedestrian Demand (Ped/hr)	Capacity (PCU/hr)	RFC	End Queue (PCU)	Delay (s)	LOS
1	206.77	206.96	18.00	0.00	1345.96	0.154	0.18	3.162	A
2	8.99	9.00	221.36	0.00	1215.42	0.007	0.01	2.983	A
3	290.37	291.02	19.80	0.00	925.90	0.314	0.46	5.677	A
4	35.06	35.10	282.91	0.00	928.12	0.038	0.04	4.031	A

Main results: (17:00-17:15)

Arm	Total Demand (PCU/hr)	Entry Flow (PCU/hr)	Circulating Flow (PCU/hr)	Pedestrian Demand (Ped/hr)	Capacity (PCU/hr)	RFC	End Queue (PCU)	Delay (s)	LOS
1	173.16	173.29	15.07	0.00	1347.68	0.128	0.15	3.065	A
2	7.53	7.53	185.35	0.00	1235.45	0.006	0.01	2.931	A
3	243.17	243.58	16.58	0.00	927.46	0.262	0.36	5.266	A
4	29.36	29.39	236.79	0.00	951.44	0.031	0.03	3.904	A